A G E N D A

REGULAR MEETING OF THE STUART CITY COMMISSION
TO BE HELD May 22, 2017
AT 5:30 PM Commission Chambers
121 SW FLAGLER AVE.
STUART, FLORIDA 34994

CITY COMMISSION

Mayor Tom Campenni
Vice Mayor Troy A. McDonald
Commissioner Kelli Glass Leighton
Commissioner Jeffrey A. Krauskopf
Commissioner Eula R. Clarke

ADMINISTRATIVE

City Manager, Paul J. Nicoletti
City Attorney, Michael J. Mortell
City Clerk, Cheryl White

Agenda items are available on our website at http://www.cityofstuart.us
Phone: (772) 288-5306 .Fax: (772) 288-5305 .E-mail: cwhite@ci.stuart.fl.us

Special Needs: Participants with special needs can be accommodated by calling the City Clerk at least 5 working days prior to the Meeting excluding Saturday and Sunday. We can be reached by phone at (772)288-5306, by fax at (772)288-5305, or by email at cwhite@ci.stuart.fl.us. If you are hearing impaired, please contact us using the Florida Relay Service, Customer Service: Dial 711 or English: (V) 800-682-8706, (TTY) 800-682-8786 Spanish: (V, TTY) 1-800-855-2886 If a person decides to appeal any decision made by the Board with respect to any matter considered at this meeting, he will need a record of the proceeding, and that for such purpose he may need to ensure that a verbatim record of the proceedings is made, which record includes the testimony and evidence upon which the appeal is to be based.

(RC) next to an item denotes there is a City Code requirement for a Roll Call vote.
(QJ) next to an item denotes that it is a quasi-judicial matter or public hearing.

ROLL CALL

PLEDGE OF ALLEGIANCE

PROCLAMATIONS

1. Garden Week June 4-11, 2017
2. National Public Works Week May 21-May 27, 2017

PRESENTATIONS

3. May Service Awards
4. May 2017, Employee of the Month - Development
5. PRESENTATION AND UPDATE OF THE CITY OF STUART COMPETITIVE FLORIDA PARTNERSHIP PROGRAM.

COMMENTS BY CITY COMMISSIONERS

COMMENTS BY CITY MANAGER

APPROVAL OF AGENDA

COMMENTS FROM THE PUBLIC (5 min. max)

WHAT IS CIVILITY?: ***Civility is caring about one's identity, needs and beliefs without degrading someone else's in the process. Civility is more than merely being polite. Civility requires staying "present" even with those persons with whom we have deep-rooted and perhaps strong disagreements. It is about constantly being open to hear, learn, teach and change. It seeks common ground as a beginning point for dialogue. It is patience, grace, and strength of character. Civility is practiced in our City Hall.*** **PUBLIC COMMENT:** ***If a member of the public wishes to comment upon ANY subject matter, including quasi-judicial matters, please submit a Request to Speak form. These forms are available in the back of the Commission Chambers, and should be given to the City Clerk prior to introduction of the item number you would like to address.***

QUASI-JUDICIAL HEARINGS: ***Some of the matters on the Agenda may be "quasi-judicial" in nature. City Commissioners will disclose all ex-parte communications, and may be subject to voir dire by any interested party regarding those communications. All witnesses testifying will be "sworn" prior to their testimony. However, the public is permitted to comment without being sworn. Unsworn testimony will be given appropriate weight and credibility by the City Commission.***

CONSENT CALENDAR: ***Those matters included under the Consent Calendar are self-explanatory, non-controversial, and are not expected to require review or discussion. All items will be enacted by one motion. If discussion on an item is desired by any City Commissioner that item may be removed by a City Commissioner from the Consent Calendar and considered separately. If an item is quasi-judicial it may be removed by a Commissioner or any member of the public from the Consent Calendar and considered separately.***

CONSENT CALENDAR

6. Approve Minutes of May 8, 2017 Special and Regular City Commission Meetings. (RC)
7. Liaison Appointment of Advisory Board Member to the Local Planning Agency Planning Advisory Board. (RC)

8. RESOLUTION No. 54-2017; A RESOLUTION OF THE CITY COMMISSION OF THE CITY OF STUART, FLORIDA AUTHORIZING THE MAYOR TO SUPPORT THE INSTALLATION OF STORAGE BUILDING AT THE ROAD TO VICTORY MILITARY MUSEUM PROVIDING AN EFFECTIVE DATE; AND FOR OTHER PURPOSES.(RC)

9. RESOLUTION No. 57-2017; A RESOLUTION OF THE CITY COMMISSION OF THE CITY OF STUART, FLORIDA TO APPROVE THE AWARD OF ITB #2017-317, SHEPARD PARK RESTROOM FACILITY PROJECT TO THE LOWEST, MOST RESPONSIVE RESPONSIBLE BIDDER FOR THE LUMP SUM TOTAL OF $142,590.00 TO ONE CALL PROPERTY SERVICES, INCORPORATED OF STUART, FLORIDA, PROVIDING AN EFFECTIVE DATE; AND FOR OTHER PURPOSES. (RC)

10. RESOLUTION No. 58-2017; A RESOLUTION OF THE CITY COMMISSION OF THE CITY OF STUART, FLORIDA TO APPROVE A PLAT TITLED "WAWA/TD BANK OF DOWNTOWN STUART", PREPARED BY ROBERT BLOOMSTER JR., FLORIDA PROFESSIONAL SURVEYOR AND MAPPER No. 4134 PROVIDING FOR AN EFFECTIVE DATE; AND FOR OTHER PURPOSES. (RC)

11. RESOLUTION No. 60-2017; A RESOLUTION OF THE CITY COMMISSION OF THE CITY OF STUART, FLORIDA TO PRESENT DEED FROM THE CITY OF STUART TO HABITAT FOR HUMANITY OF MARTIN COUNTY, INC. FOR THE REAL PROPERTY LOCATED AT 917 S.E. BAYOU AVENUE, STUART, FLORIDA; AND PROVIDING AN EFFECTIVE DATE AND FOR OTHER MATTERS. (RC)

12. RESOLUTION No. 61-2017; A RESOLUTION OF THE CITY COMMISSION OF THE CITY OF STUART, FLORIDA TO PRESENT DEED FROM THE CITY OF STUART TO HABITAT FOR HUMANITY OF MARTIN COUNTY, INC. FOR THE REAL PROPERTY LOCATED AT 924 S.E. BAHAMA AVENUE, STUART, FLORIDA; AND PROVIDING AN FFECTIVE DATE AND FOR OTHER MATTERS. (RC)

END OF CONSENT CALENDAR

COMMISSION ACTION

13. REQUEST APPROAVAL TO ENGAGE THE SERVICE OF COLING BAENZINGER & ASSOCIATES AS PROFESSIONAL CONSULTANT FOR EXECUTIVE RECRUITMENT SERVICE FOR THE CITY MANAGER POSITION. (RC)

14. RESOLUTION No. 56-2017; A RESOLUTION OF THE CITY COMMISSION OF THE CITY OF STUART, FLORIDA AUTHORIZING BUDGET AMENDMENT #8 TO THE 2016-2017 STORMWATER UTILITY FUND; APPROPRIATING AND AUTHORIZING THE EXPENDITURE OF FUNDS FOR THE STORMWATER UTILITY BILLING ROLL UPDATE, PROVIDING AN EFFECTIVE DATE, AND FOR OTHER PURPOSES. (RC)

15. RESOLUTION No. 59-2017; A RESOLUTION OF THE CITY COMMISSION OF THE CITY OF STUART, FLORIDA AUTHORIZING THE MAYOR TO EXECUTE A LETTER SUPPORTING THE MARTIN COUNTY BOARD OF COUNTY COMMISSIONERS' APPLICATION FOR A PADDLING TRAIL DESIGNATION THROUGH THE FLORIDA DEPARTMENT OF ENVIRONMENTAL PROTECTION (FDEP) OFFICE OF GREENWAYS AND TRAILS; PROVIDING AN EFFECTIVE DATE; AND FOR OTHER PURPOSES. (RC)

ORDINANCE FIRST READING

16. ORDINANCE No. 2354-2017; AN ORDINANCE OF THE CITY OF STUART, FLORIDA AMENDING CHAPTER 2, SECTION 2.03.05, TABLE 3 "MAXIMUM DWELLING UNITS PER ACRE" OF THE CITY'S LAND DEVELOPMENT CODE, PROVIDING FOR CONSISTENCY WITHIN THE MINIMUM LOT SIZE REQUIREMENTS BY INCREASING THE MAXIMUM DENSITIES FOR THE R-1A AND R-1 DISTRICTS TO BE CONSISTENT WITH THE CITY'S COMPREHENSIVE PLAN; DECLARING SAID AMENDMENTS TO BE CONSISTENT WITH

THE CITY'S COMPREHENSIVE PLAN; PROVIDING FOR A SEVERABILITY CLAUSE, A CONFLICT CLAUSE AND CODIFICATION; PROVIDING FOR AN EFFECTIVE DATE, AND FOR OTHER PURPOSES.

ORDINANCE SECOND READING

17. ORDINANCE No. 2344-2017; AN ORDINANCE OF THE CITY COMMISSION OF THE CITY OF STUART, FLORIDA TO PROVIDE FOR THE ABANDONMENT OF CERTAIN PUBLIC RIGHT-OF-WAY WITHIN THE CITY BEING THAT CERTAIN 40-FOOT RIGHT-OF-WAY, AS SET FORTH ON THE PLAT OF STUART FARMS, AS RECORDED IN PLAT BOOK 1, PAGE 63, MARTIN COUNTY, FLORIDA PUBLIC RECORDS RUNNING NORTH TO SOUTH THROUGH THE PROPERTY DESCRIBED IN EXHIBIT "A" ATTACHED HERETO AND DEPICTED IN EXHIBIT "B" ATTACHED HERETO; PROVIDING FOR SEVERABILITY; PROVIDING AN EFFECTIVE DATE; AND FOR OTHER PURPOSES. (RC)

18. ORDINANCE No. 2352-2017; AN ORDINANCE OF THE CITY OF STUART, FLORIDA, ANNEXING THREE PARCELS OF LAND WEST OF SE FEDERAL HIGHWAY, CONSISTING OF 13.57 ACRES, SAID PARCELS BEING MORE FULLY DESCRIBED IN EXHIBIT "A" ATTACHED HERETO; PROVIDING DIRECTIONS TO THE CITY CLERK; PROVIDING FOR REPEAL OF ALL ORDINANCES IN CONFLICT; PROVIDING FOR SEVERABILITY; AND PROVIDING FOR AN EFFECTIVE DATE, AND FOR OTHER PURPOSES. (RC)

19. (Quasi Judicial) ORDINANCE No. 2353-2017; AN ORDINANCE OF THE CITY COMMISSION OF THE CITY OF STUART, FLORIDA APPROVING A REZONING FROM "URBAN GENERAL" IN THE CITY'S URBAN DISTRICT TO "CPUD" - COMMERCIAL PLANNED UNIT DEVELOPMENT ON THE CITY'S OFFICIAL ZONING MAP FOR A 10.4 ACRE PARCEL LOCATED AT 20 NE DIXIE HIGHWAY, SAID LAND BEING MORE FULLY DESCRIBED IN EXHIBIT "A" ATTACHED, ESTABLISHING THE TREASURE COAST COMMUNITY CHURCH COMMERCIAL PLANNED UNIT DEVELOPMENT CONSISTING OF A NEW 32,572 SQUARE FOOT WORSHIP CENTER BUILDING AND A 17,000 SQUARE FOOT TWO STORY OFFICE BUILDING DESIGNATED FOR NON-PROFIT ORGANIZATIONS; APPROVING A MASTER DEVELOPMENT PLAN; PROVIDING FOR DEVELOPMENT CONDITIONS; PROVIDING A TIMETABLE FOR DEVELOPMENT; PROVIDING FOR ACCEPTANCE BY THE APPLICANT; DECLARING THE PLAN TO BE CONSISTENT WITH THE CITY'S COMPREHENSIVE PLAN; REPEALING ALL ORDINANCES IN CONFLICT HEREWITH; PROVIDING FOR SEVERABILITY; PROVIDING DIRECTIONS TO THE CITY CLERK; PROVIDING FOR AN EFFECTIVE DATE, AND FOR OTHER PURPOSES. (RC)(QJ)

DISCUSSION AND DELIBERATION

ADJOURNMENT

CITY OF STUART, FLORIDA
AGENDA ITEM REQUEST
CITY COMMISSION

Meeting Date:5/22/2017 **Prepared by:**Ryanne Cavo

Title of Item:
Garden Week June 4-11, 2017
Summary Explanation/Background Information on Agenda Request:
Gardening enables members of garden clubs across the nation and the world to make a world of difference in the communities where they reside and work.

Funding Source:
N/A
Recommended Action:
Issue the Proclamation

ATTACHMENTS:

	Description	Upload Date	Type
🗋	Proclamation	5/16/2017	Proclamation

PROCLAMATION
GARDEN WEEK
JUNE 4 -11, 2017

WHEREAS, gardeners have a passion for nurturing the beauty and resources of the earth through the planting of seeds, the care of all plants and the riches of their efforts; and

WHEREAS, gardeners work to preserve our country's traditional spirit of independence and initiative through innovation and hard work; and

WHEREAS, gardening enables members of garden clubs across the nation and the world to make a world of difference in the communities where they reside and work.

NOW, THEREFORE, in an effort to acknowledge the importance of gardening and the numerous contributions of gardeners and garden clubs, I, Tom Campenni, Mayor of the City of Stuart hereby proclaim June 4 - 11, 2017 as:

GARDEN WEEK

IN WITNESS WHEREOF, I have hereunto set my hand this 22nd day of May, 2017.

ATTEST:

_____

TOM CAMPENNI
Mayor

CITY OF STUART, FLORIDA
AGENDA ITEM REQUEST
CITY COMMISSION

Meeting Date: 5/22/2017 **Prepared by:** Sam Amerson, PE-Public Works Director

Title of Item:
National Public Works Week May 21-May 27, 2017

Summary Explanation/Background Information on Agenda Request:
The year 2017 marks the 57th annual National Public Works Week sponsored by the American Public Works Association.

Governor Rick Scott has officially acknowledged May 21-May 27, 2017 as *Public Works Week in Florida.*

A representative of the Treasure Coast Branch of the APWA will be present to receive the proclamation.

Funding Source:
N/A

Recommended Action:
Proclaim and Observe May 21-May 27, 2017 as National Public Works Week in Stuart,FL

ATTACHMENTS:

	Description	Upload Date	Type
🗋	Florida-National Public Works Week Proclamation	5/17/2017	Cover Memo
🗋	Proclamation - City of Stuart Public Works	5/17/2017	Proclamation

RICK SCOTT
GOVERNOR

PUBLIC WORKS WEEK IN FLORIDA

WHEREAS, public works infrastructure, facilities, and services are important to the health, safety, and well-being of the people of Florida; and

WHEREAS, such facilities and services could not be provided without the dedicated efforts of public works professionals, engineers, managers, and employees from state and local units of government and the private sector; and

WHEREAS, these professionals are responsible for and must plan, design, build, operate, and maintain the transportation, water supply, water treatment and solid waste systems, public buildings, and other structures and facilities essential to serve our citizens; and

WHEREAS, the year 2017 marks the 57th annual National Public Works Week sponsored by the American Public Works Association;

NOW, THEREFORE, I, Rick Scott, Governor of the State of Florida, do hereby extend greetings and best wishes to all observing May 21-27, 2017, as *Public Works Week in Florida.*

IN WITNESS WHEREOF, I have hereunto set my hand and caused the Great Seal of the State of Florida to be affixed at Tallahassee, the Capital, this 24th day of April, in the year two thousand seventeen.

Governor

@FLGovScott

THE CAPITOL
TALLAHASSEE, FLORIDA 32399 • (850) 717-9249

www.FLGov.com

PROCLAMATION
PUBLIC WORKS WEEK
MAY 21-27, 2017

WHEREAS, public works provides, maintains, and improves the structures and services that assure a higher quality of life for our communities, which is an integral part of our citizens' everyday lives; and

WHEREAS, the support of an understanding and informed citizenry is vital to the efficient operation of public works systems and programs such as water, sewers, streets and drainage, watershed management, public buildings, parks, vehicle maintenance, solid waste collections and recycling; and

WHEREAS, the health, safety and comfort of this community greatly depends on these facilities and services; and

WHEREAS, the quality and effectiveness of these facilities, as well as their planning, design, and construction, are vitally dependent upon the efforts and skill of public works officials; and

WHEREAS, the efficiency of the qualified and dedicated personnel who staff public works departments is materially influenced by the people's attitude and understanding of the importance of the work they perform.

NOW THEREFORE I, Tom Campenni, Mayor of the City of Stuart, Florida do hereby proclaim May 21-27, 2017 as:

PUBLIC WORKS WEEK

in The City of Stuart and I call upon all citizens and civic organizations to acquaint themselves with the issues involved in providing our public works and to recognize the contributions which public works officials make every day to our health, safety, comfort, and quality of life.

IN WITNESS WHEREOF, I have hereto set my hand and caused the seal of the City of Stuart, Florida to be affixed this 17th day of May, 2017.

_____
TOM CAMPENNI
MAYOR

CITY OF STUART, FLORIDA
AGENDA ITEM REQUEST
CITY COMMISSION

Meeting Date:5/22/2017 **Prepared by:**R. Johnson

Title of Item:
May Service Awards
Summary Explanation/Background Information on Agenda Request:
Frank Logalbo Police 30 years
Funding Source:
General Fund
Recommended Action:
Present Awards

CITY OF STUART, FLORIDA
AGENDA ITEM REQUEST
CITY COMMISSION

Meeting Date:5/22/2017 **Prepared by:**Joseph Hoffkins

Title of Item:
May 2017, Employee of the Month - Development
Summary Explanation/Background Information on Agenda Request:
May 2017, Employee of the Month - Development

Funding Source:
N/A
Recommended Action:
Award May 2017 Employee of the Month

ATTACHMENTS:

	Description	Upload Date	Type
🗋	May 2017 Employee of the Month	5/17/2017	Cover Memo

Stuart

Building Division
121 S.W. Flagler Avenue • Stuart • Florida • 34994

MEMORANDUM

TO: Terry O'Neil, Development Department Director

FROM: Joseph J. Hoffkins, Building Official

SUBJECT: May 2017 Employee of the Month - Grace Alvarado

DATE: May 5, 2017

It is my pleasure to nominate Grace Alvarado, Permit Technician for the Building Division, as the City of Stuart's "Employee of the Month" for May 2017. She has gone above and beyond her regular duties on a frequent basis in the past few months. As you know, the Permitting Division is staffed with three (3) employees, and we suddenly found ourselves down to one (1) due to a sudden resignation and an unexpected absence due to FMLA. Grace was scheduled to take vacation at this time and realized she had to cancel because she was the only employee left in Permitting. Although understandably disappointed, Grace accepted the crisis and maintained a professional demeanor while changing her plans. At the last minute, arrangements were made to grant Grace that long weekend with her family, but what really stands out is Grace's unwavering loyalty to the City during this difficult time for the division.

When Grace returned from her long weekend, she remained the only staff member in the division for several weeks and handled all aspects of the front office singlehandedly. This is a monumental task for one (1) employee to manage, and Grace performed admirably. In addition to managing all operations, Grace was also charged with training the new Permit Technician the day she arrived.

A few of Grace's key accomplishments include:

- Serving as the Development Department and the Building Division's lead information contact for all permitting requirements.
- Training new employees on the permitting process and computer systems.
- Serving as a Wellness Ambassador (currently a back-up) and member of the annual Employee Appreciation Picnic Committee.
- Setting up monthly reports on all permits issued and applied for, as well as value of construction and fees collected.
- Taking the lead on Impact Fees calculation and attending joint meetings when needed.

Due to her loyalty, dedication, professional demeanor in a crisis, and performance above and beyond the call of duty, it is my pleasure to nominate Grace Alvarado as the May 2017 Employee of the Month.

CITY OF STUART, FLORIDA
AGENDA ITEM REQUEST
CITY COMMISSION

Meeting Date: 5/22/2017 **Prepared by:** Teresa Lamar-Sarno, AICP

Title of Item:

PRESENTATION AND UPDATE OF THE CITY OF STUART COMPETITIVE FLORIDA PARTNERSHIP PROGRAM.

Summary Explanation/Background Information on Agenda Request:

The City of Stuart was awarded a Competitive Florida grant by the Department of Economic Opportunity. In the application process the City of Stuart described the following goals we wanted to achieve via this grant:

1. Develop clear direction for strong economic development strategy;
2. Use actionable projects, identified in the economic development strategy, to build upon strong community support, and to re-build the local economy;
3. Build a strong economic development strategy to position the City as a vibrant and thriving community;
4. Create economic sustainability while maintaining Stuart's "Old Florida" charm.

The City Manager's office, via the Special Assistant to the City Manager, has directed most of the work involved toward accomplishing the seven deliverables per the DEO contract for the implementation of the grant, and reimbursable of $40,000 to the City of Stuart.

The presentation today will provide an update on the process, the draft plan, sample of findings and future steps in accomplishing the goals of the grant.

CITY MANAGER'S NOTE: A copy of the presentation will be sent out on Friday to the City Commissioners. At the June 12th Regular Meeting, the City Commission will be asked to approve a Final Draft and Economic Development Plan.

Funding Source:

Department of Economic Opportunity Grant: $40,000

Recommended Action:

n/a

CITY OF STUART, FLORIDA
AGENDA ITEM REQUEST
CITY COMMISSION

Meeting Date: 5/22/2017 **Prepared by:** Cherie White, City Clerk

Title of Item:
Approve Minutes of May 8, 2017 Special and Regular City Commission Meetings. (RC)
Summary Explanation/Background Information on Agenda Request:

Funding Source:
N/A
Recommended Action:
Approve Minutes

ATTACHMENTS:

	Description	Upload Date	Type
🗋	5/8/2017 CCM MInutes	5/17/2017	Backup Material
🗋	5/8/2017 SCM Minutes	5/17/2017	Backup Material

MINUTES
REGULAR MEETING OF THE STUART CITY COMMISSION
HELD May 8, 2017
AT 5:30 PM
121 SW FLAGLER AVE.
STUART, FLORIDA 34994

CITY COMMISSION
Mayor Tom Campenni
Vice Mayor Troy A. McDonald
Commissioner Kelli Glass Leighton
Commissioner Jeffrey A. Krauskopf
Commissioner Eula R. Clarke

ADMINISTRATIVE
City Manager, Paul J. Nicoletti
City Attorney, Michael J. Mortell
City Clerk, Cheryl White

ROLL CALL

5:29 PM Roll Call.

Present: Mayor Campenni, Vice Mayor McDonald, Commissioner Clarke, Commissioner Krauskopf, Commissioner Glass Leighton.

5:30 PM PLEDGE OF ALLEGIANCE

5:30 PM 1. Arts Moment - Aurora Jenkins

Aurora Jenkins, 7th grader from Stuart Middle sang the song Hero by Murriah Carey.

PROCLAMATIONS

5:37 PM 2. Mental Health Awareness Month - May 2017
Accepting are: Suncoast Mental Health Center; Mickey Hofmaier, Administrator of Clinical Services and Ted LaBedz: Board of Directors Also accepting: New Horizons Mental Health

New Horizons Pat Austin came forward and graciously accepted the proclamation.

Suncoast Mental Health Mickey Hofmaier and Ted LaBedz came forward and accepted the Proclamation and thanked the City.

5:40 PM 3. Tobacco Free Florida Week - Week of May 7, 2017

Kim Nash and Michael Williams of the Boys and Girls Club came forward and graciously accepted the Proclamation. Michael Williams is a SWAT Leader, Students Working Against Tobacco.

5:44 PM 4. Drinking Water Week May 7-13, 2017
Recipient: Mike Woodside, Water Treatment Plant Team Leader

Mike Woodside, Water Treatment Plant Team Leader came forward and graciously accepted the Proclamation and thanked the City Commission.

PRESENTATIONS

5:48 PM 5. Comprehensive Annual Financial Report - Fiscal Year 2016

Ronald Conrad, CPA of Cherry Bekaert came forward and gave a brief overview of the City Comprehensive Annual Financial Report.

5:57 PM Motion: Accept Financial Report, Action: Approve, Moved by Commissioner Clarke, Seconded by Commissioner Krauskopf.
Motion passed unanimously.

5:58 PM COMMENTS BY CITY COMMISSIONERS

Commissioner Glass Leighton asked when the City docks would be completed.

Commissioner McDonald thanked everyone for the sympathy on the loss of his Father in Law. He also had a request to move forward item 12 after the Consent Calendar.

Mayor Campenni announced he recently attended the EMO a class for Elected Officials. He said it was worthwhile and recommended everyone to attend. He also stated he received an email from Sandra Thurlow regarding the street Christie Way.

City Attorney Mortell stated it was not her intent to name another street but to add a sign listing the street name along A1A, he further added that the street is a one way street and the sign was purposely not added to elude to drivers that they could turn on that street. He doesn't see it creating a serious problem to add a sign including an arrow indicating a one way street, and wouldn't require naming rights however it is a County Road.

6:01 PM **6:01 PM Motion to discuss with Martin County the adding of a street name sign along A1A at Christie Way:, Action: Approve, Moved by Commissioner Glass Leighton, Seconded by Commissioner Clarke.**
Motion passed unanimously.

6:01 PM COMMENTS BY CITY MANAGER

Manager Nicoletti announced that he received a notice from Martin County indicating that they would not be renewing the Fire Response Interlocal Agreement. He said the City would need to take appropriate action, and would be meeting with County Administrator Taryn Kryzda to discuss the matter further.

Commissioner Glass Leighton asked the City to look at all the Interlocal Agreements with Martin County.

Vice Mayor McDonald asked the City staff to bring back the number of Fire and Rescue calls to the unincorporated areas.

Mayor Campenni agreed.

6:06 PM APPROVAL OF AGENDA

6:06 PM Motion: Approve Agenda moving item 12 to after the Consent Calendar, Action: Approve, Moved by Commissioner Glass Leighton, Seconded by Commissioner Clarke.
Motion passed unanimously.

COMMENTS FROM THE PUBLIC (5 min. max)

None

CONSENT CALENDAR

6:06 PM 6. Minutes of 04/24/2017 CCM for approval

7. RESOLUTION NUMBER 42-2017; A RESOLUTION OF THE CITY COMMISSION OF THE CITY OF STUART, FLORIDA TO EXECUTE THE LAND EXCHANGE AGREEMENT BY AND BETW EEN THE CITY OF STUART AND HABITAT FOR HUMANITY OF MARTIN COUNTY, INC. FOR THE REAL PROPERTY LOCATED AT CHURCH STREET, STUART, FLORIDA; AND 520 S.E. FLORIDA STREET, STUART, FLORIDA; AND PROVIDING AN EFFECTIVE DATE AND FOR OTHER MATTERS.

8. RESOLUTION No. 43-2017; A RESOLUTION OF THE CITY COMMISSION OF THE CITY OF STUART, FLORIDA TO PRESENT DEED FROM THE CITY OF STUART TO HABITAT FOR HUMANITY OF MARTIN COUNTY, INC. FOR THE REAL PROPERTY LOCATED AT CHURCH STREET, STUART, FLORIDA; AND PROVIDING AN EFFECTIVE DATE AND FOR OTHER MATTERS.

9. RESOLUTION No. 46-2017; A RESOLUTION OF THE CITY COMMISSION OF THE CITY OF STUART, FLORIDA TO ACCEPT DEED FROM HABITAT FOR HUMANITY OF MARTIN COUNTY, INC. FOR THE REAL PROPERTY LOCATED AT 520 S.E. FLORIDA

STREET, STUART, FLORIDA; AND PROVIDING AN EFFECTIVE DATE AND FOR OTHER MATTERS.

END OF CONSENT CALENDAR

6:06 PM Motion: Consent Calendar, Action: Approve, Moved by Commissioner Krauskopf, Seconded by Commissioner Glass Leighton. Motion passed unanimously.

6:07 PM

Item 12 was moved to be heard after the Consent Calendar.

12. ORDINANCE No. 2347-2017; AN ORDINANCE OF THE CITY OF STUART, FLORIDA, AMENDING SECTION 8-2(b) IN THE STUART CODE OF ORDINANCES TO ALLOW BACKYARD CHICKENS IN CERTAIN RESIDENTIAL ZONING DISTRICTS; AMENDING SECTION 2.06.00 OF THE STUART LAND DEVELOPMENT CODE, SUPPLEMENTAL USE STANDARDS FOR URBAN AGRICULTURE, TO PROVIDE FOR CHICKENS IN COMMUNITY GARDENS AND SINGLE FAMILY RESIDENTIAL PROPERTIES; PROVIDING FOR REPEAL OF CONFLICTING ORDINANCES; PROVIDING FOR SEVERABILITY; PROVIDING FOR CODIFICATION; AND PROVIDING FOR AN EFFECTIVE DATE, AND FOR OTHER PURPOSES

Pinal Gandhi-Savdas, Senior Planner gave a brief overview of the proposed changes recommended at the last meeting and were incorporated into the Ordinance. Staff recommends approval.

Vice Mayor McDonald inquired about the opaque fencing, and expressed concern over the proposed removal of the opaque fencing.

Mayor Campenni suggested changing that a requirement to backyard chickens you must have an opaque fencing or wall.

Vice Mayor McDonald said he has received several comments opposing backyard chickens.

Mayor Campenni announced that the City had received a letter from the Real Estate Board asking that this item be continued so that they can poll their members.

6:11 PM Motion: Postpone the item until the City hears back from the Martin County Real Estate Board, Action: Approve, Moved by Vice Mayor McDonald, Seconded by Commissioner Glass Leighton.

John Gonzales came forward and apologized on behalf of the President of the Realtors Association who had an emergency and couldn't be here. He explained that they were concerned this matter came up rather quickly and they needed time to obtain additional information.

Commissioner Krauskopf expressed concern over the open ended date to bring it back, and asked for a date certain. He also asked if there have been any cities that have recided allowing backyard chickens and if so what were some of the issues.

Mayor Campenni stated he supports the Ordinance and is ready to move forward.

Commissioner Glass Leighton supports the action to delay the approval in order to gain additional input requested by the Realtors Association.

F. Shields McManus came forward representing his clients John and Laura Leighton Eileen, John Morris, James Vopal, who all live in the same neighborhood. His clients are concerned that there has not been enough public input, and would like to see a public workshop.

6:19 PM Motion: Amend motion to bring the item back June 12, 2017 representing, Action: Approve, Moved by Vice Mayor McDonald, seconded. by Commissioner Glass Leighton.

Amy Springer came forward in support of the proposed Ordinance.

A roll call was done:
Opposed Mayor Campenni and Commissioner Clarke 3/2

6:26 PM **Motion:** Moved to hear the previous item 12 ORDINANCE No. 2347-2017 to June 26, 2017, **Action:** Approve, Moved by Commissioner Krauskopf, Seconded by Commissioner Glass Leighton.
Motion passed unanimously.

COMMISSION ACTION

ORDINANCE FIRST READING

10. ORDINANCE No. 2352-2017; AN ORDINANCE OF THE CITY OF STUART, FLORIDA, ANNEXING THREE PARCELS OF LAND WEST OF SE FEDERAL HIGHWAY, CONSISTING OF 13.57 ACRES, SAID PARCELS BEING MORE FULLY DESCRIBED IN EXHIBIT "A" ATTACHED HERETO; PROVIDING DIRECTIONS TO THE CITY CLERK; PROVIDING FOR REPEAL OF ALL ORDINANCES IN CONFLICT; PROVIDING FOR SEVERABILITY; AND PROVIDING FOR AN EFFECTIVE DATE, AND FOR OTHER PURPOSES.

Pinal Gandhi-Savdas, Senior Planner gave a brief presentation to the Commission and recommends approval.

6:31 PM Motion: Ordinance 2352-2017 on first reading. , Action: Approve, Moved by Commissioner Clarke, Seconded by Commissioner Glass Leighton.
Motion passed unanimously.

6:33 PM 11. (Quasi Judicial) ORDINANCE No. 2353-2017; AN ORDINANCE OF THE CITY COMMISSION OF THE CITY OF STUART, FLORIDA APPROVING A REZONING FROM "URBAN GENERAL" IN THE CITY'S URBAN DISTRICT TO "CPUD" - COMMERCIAL PLANNED UNIT DEVELOPMENT ON THE CITY'S OFFICIAL ZONING MAP FOR A 10.4 ACRE PARCEL LOCATED AT 20 NE DIXIE HIGHWAY, SAID LAND BEING MORE FULLY DESCRIBED IN EXHIBIT "A" ATTACHED, ESTABLISHING THE TREASURE COAST COMMUNITY CHURCH COMMERCIAL PLANNED UNIT DEVELOPMENT CONSISTING OF A NEW 32,572 SQUARE FOOT W ORSHIP CENTER BUILDING AND A 17,000 SQUARE FOOT TW O STORY OFFICE BUILDING DESIGNATED FOR NON-PROFIT ORGANIZATIONS; APPROVING A MASTER DEVELOPMENT PLAN; PROVIDING FOR DEVELOPMENT CONDITIONS; PROVIDING A TIMETABLE FOR DEVELOPMENT; PROVIDING FOR ACCEPTANCE BY THE APPLICANT; DECLARING THE PLAN TO BE CONSISTENT W ITH THE CITY'S COMPREHENSIVE PLAN; REPEALING ALL ORDINANCES IN CONFLICT HEREW ITH; PROVIDING FOR SEVERABILITY; PROVIDING DIRECTIONS TO THE CITY CLERK; PROVIDING FOR AN EFFECTIVE DATE, AND FOR OTHER PURPOSES.

Tom Reetz Planner gave a brief presentation to the Commission and public.

Sam Amerson, Applicant representative came forward and gave a brief overview of the proposed project.

Vice Mayor McDonald recommended LED lighting for the site.

6:47 PM Motion: Ordinance 2347-2017, Action: Approve, Moved by Vice Mayor McDonald, Seconded by Commissioner Clarke.
Motion passed unanimously.

ORDINANCE SECOND READING
Item 12 was heard earlier

12. ORDINANCE No. 2347-2017; AN ORDINANCE OF THE CITY OF STUART, FLORIDA, AMENDING SECTION 8-2(b) IN THE STUART CODE OF ORDINANCES TO ALLOW BACKYARD CHICKENS IN CERTAIN RESIDENTIAL ZONING DISTRICTS; AMENDING SECTION 2.06.00 OF THE STUART LAND DEVELOPMENT CODE, SUPPLEMENTAL USE STANDARDS FOR URBAN AGRICULTURE, TO PROVIDE FOR CHICKENS IN COMMUNITY GARDENS AND SINGLE FAMILY RESIDENTIAL PROPERTIES; PROVIDING FOR REPEAL OF CONFLICTING ORDINANCES; PROVIDING FOR SEVERABILITY; PROVIDING FOR CODIFICATION; AND PROVIDING FOR AN EFFECTIVE DATE, AND FOR OTHER PURPOSES.

DISCUSSION AND DELIBERATION

6:48 PM ADJOURNMENT

_____ _____

Cheryl White, City Clerk Tom Campenni, Mayor

Minutes to be approved at the Special Commission Meeting this 22nd day of May, 2017.

SPECIAL MEETING OF THE STUART CITY COMMISSION
HELD May 8, 2017
AT 4:00 PM BUDGET WORKSHOP
121 S.W. FLAGLER AVE.
STUART, FLORIDA 34994

CITY COMMISSION
Mayor Tom Campenni
Vice Mayor Troy A. McDonald
Commissioner Kelli Glass Leighton
Commissioner Jeffrey A. Krauskopf
Commissioner Eula R. Clarke

ADMINISTRATIVE
City Manager, Paul J. Nicoletti
City Attorney, Michael J. Mortell
City Clerk, Cheryl White

ROLL CALL

4:00 PM Roll Call.

Present: Mayor Campenni, Vice Mayor McDonald, Commissioner Clarke, Commissioner Krauskopf, Commissioner Glass Leighton.

4:00 PM PLEDGE OF ALLEGIANCE

PRESENTATIONS

4:01 PM 1. Fiscal Year 2018 Budget Workshop #1

Joly Boglioli gave a visual presentation to the Commission and public regarding the 2018 proposed budget.

COMMENTS BY CITY COMMISSIONERS

The Commission asked questions and the Mayor directed staff to look at the payouts for retiring Department Directors.

COMMENTS BY CITY MANAGER

APPROVAL OF AGENDA

COMMENTS FROM THE PUBLIC (5 min. max)

CONSENT CALENDAR

END OF CONSENT CALENDAR

COMMISSION ACTION

ORDINANCE FIRST READING

ORDINANCE SECOND READING

DISCUSSION AND DELIBERATION

4:38 PM ADJOURNMENT:

_____ _____

Cheryl White, City Clerk Tom Campenni, Mayor

Minutes to be approved at the Special Commission Meeting this 22nd day of May, 2017.

CITY OF STUART, FLORIDA
AGENDA ITEM REQUEST
CITY COMMISSION

Meeting Date:5/22/2017 **Prepared by:**C White, City Clerk

Title of Item:

Liaison Appointment of Advisory Board Member to the Local Planning Agency Planning Advisory Board. (RC)

Summary Explanation/Background Information on Agenda Request:

Due to the resignation of John Leighton, who served on the LPA, a vacancy has occurred. Mayor Campenni is the liaison for that position, and has requested the Commission consider appointment of William Merritt Matheson, who has applied to serve, and his application is attached.

Funding Source:

N/A

Recommended Action:

Consider Appointment of William Merritt Matheson to the LPA.

CITY OF STUART, FLORIDA
AGENDA ITEM REQUEST
CITY COMMISSION

Meeting Date: 5/22/2017 **Prepared by:** Nicole King

Title of Item:
RESOLUTION No. 54-2017; A RESOLUTION OF THE CITY COMMISSION OF THE CITY OF STUART, FLORIDA AUTHORIZING THE MAYOR TO SUPPORT THE INSTALLATION OF STORAGE BUILDING AT THE ROAD TO VICTORY MILITARY MUSEUM PROVIDING AN EFFECTIVE DATE; AND FOR OTHER PURPOSES.(RC)

Summary Explanation/Background Information on Agenda Request:

Funding Source:
N/A
Recommended Action:
APPROVE RESOLUTION FOR THE INSTALLATION OF STORAGE BUILDING AT THE ROAD TO VICTORY MILITARY MUSEUM

ATTACHMENTS:

	Description	Upload Date	Type
🗋	RES 54-2017 Installation of Shed for Victory Museum	5/17/2017	Cover Memo
🗋	Storage Shed for Victory Museum	5/17/2017	Attachment

BEFORE THE CITY COMMISSION
CITY OF STUART, FLORIDA

RESOLUTION NUMBER 54-2017

A RESOLUTION OF THE CITY COMMISSION OF THE CITY OF STUART, FLORIDA AUTHORIZING THE MAYOR TO SUPPORT THE INSTALLATION OF STORAGE BUILDING AT THE ROAD TO VICTORY MILITARY MUSEUM PROVIDING AN EFFECTIVE DATE; AND FOR OTHER PURPOSES.

* * * * *

NOW, THEREFORE, BE IT RESOLVED BY THE CITY COMMISSION OF THE CITY OF STUART, FLORIDA that:

SECTION 1: The City Commission authorizes the Mayor to support the installation of storage building at the road to victory military museum.

SECTION 2: Effective Date: This Resolution shall become effective immediately upon its passage and adoption.

Commissioner _____offered the foregoing resolution and moved its adoption. The motion was seconded by Commissioner _____and upon being put to a roll call vote, the vote was as follows:

	YES	NO	ABSENT
THOMAS CAMPENNI, MAYOR			
TROY MCDONALD, VICE MAYOR			
JEFFREY A. KRAUSKOPF, COMMISSIONER			
KELLI GLASS-LEIGHTON, COMMISSIONER			
EULA R. CLARKE, COMMISSIONER			

ADOPTED this 22th day of May, 2017.

ATTEST:

_____
CHERYL WHITE
CITY CLERK

_____
TOM CAMPENNI
MAYOR

APPROVED AS TO FORM AND
CORRECTNESS:

_____
MICHAEL MORTELL
CITY ATTORNEY

ROAD TO VICTORY MILITARY MUSEUM PROPERTY OVERVIEW

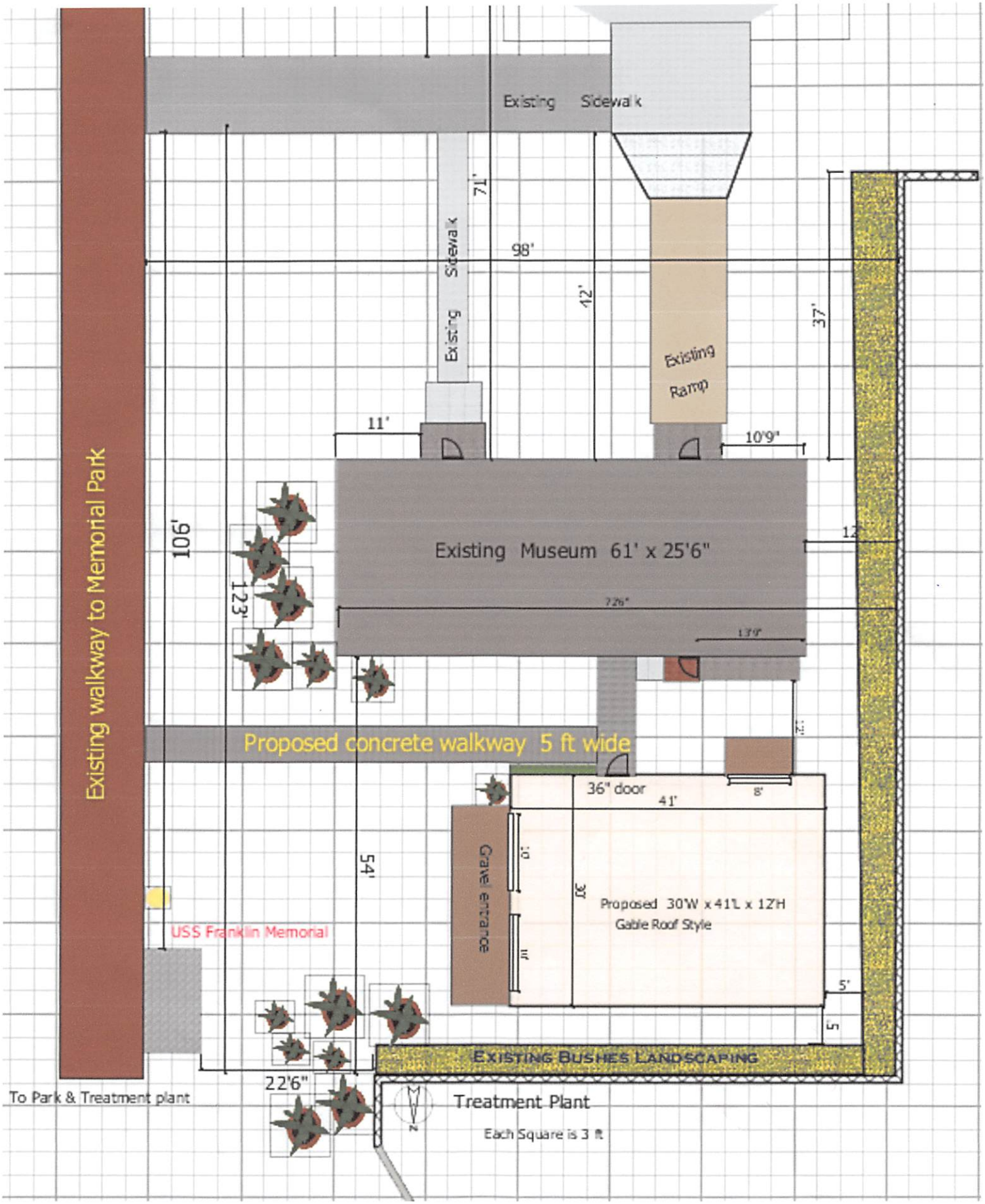

Proposed museum building addition in relation to the museum and south entrance to Memorial Park

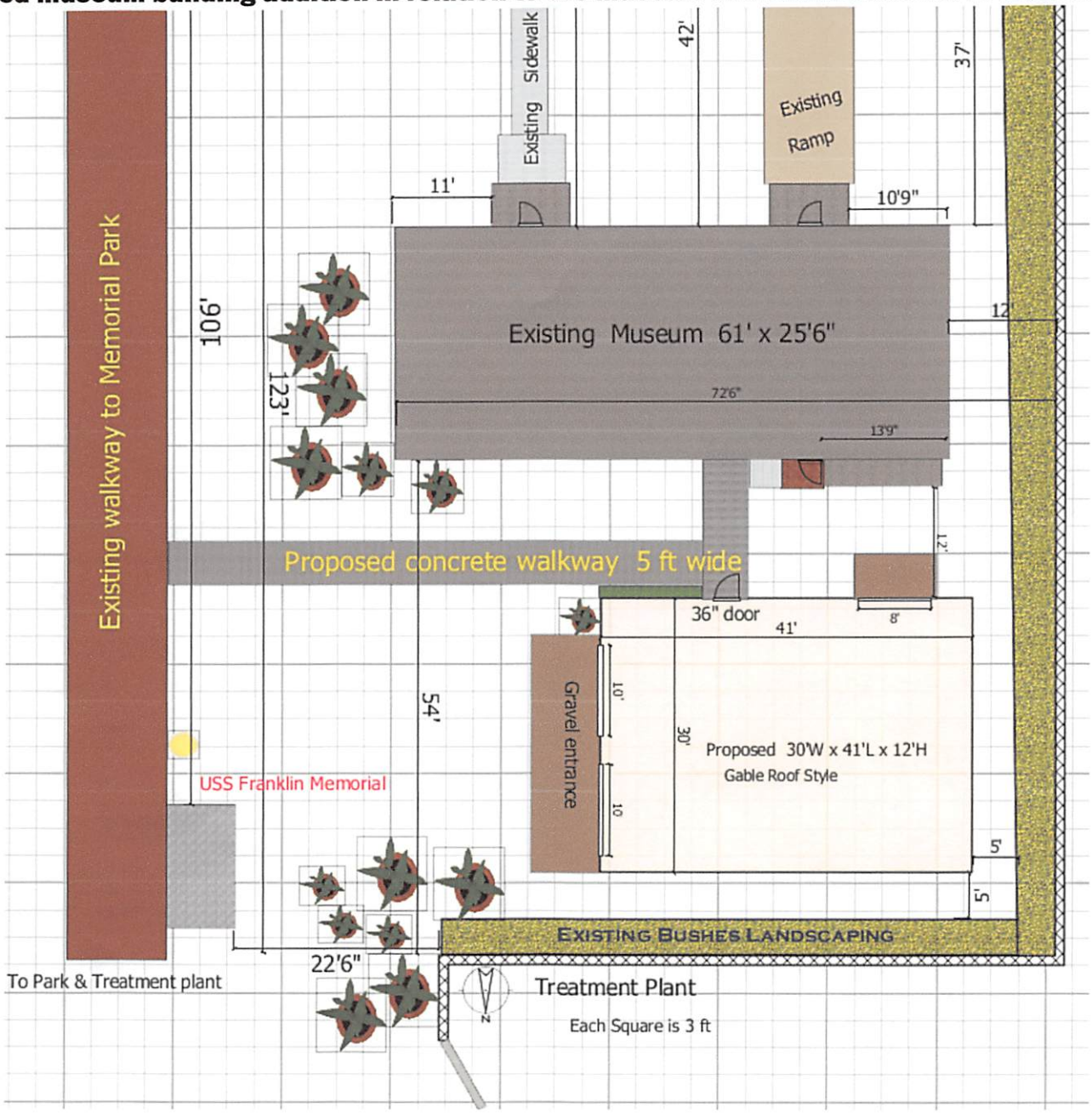

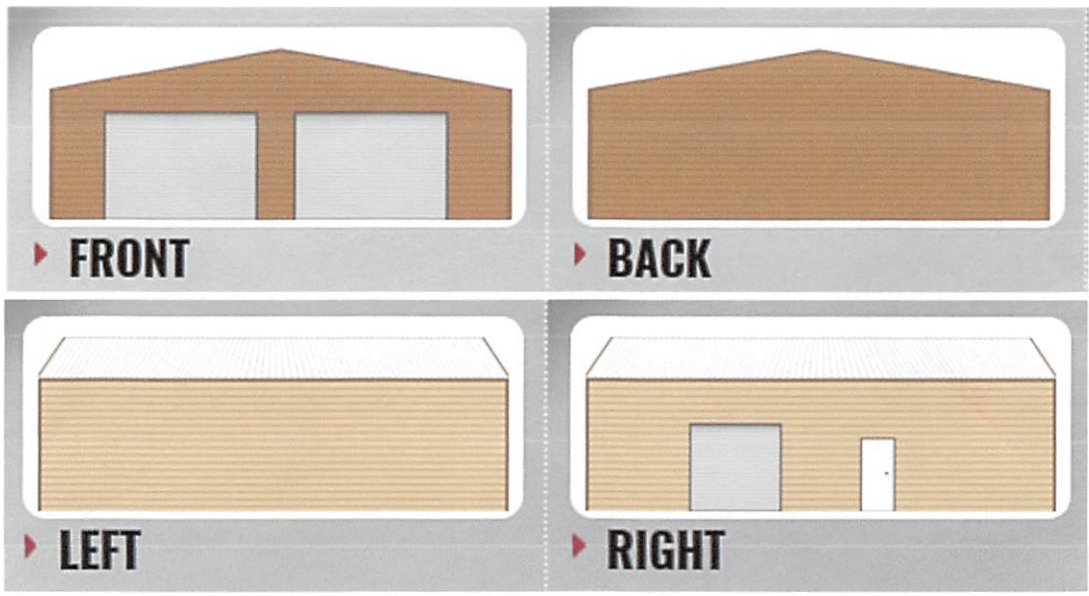

Color Clay

Color Sand stone

Installation of a museum building addition will enhance the overall appearance of the museum property and the esthetics of the south entrance to Memorial Park.

KARL LEHTOLA

772-285-5636 CELL

Customer: Road To Victory Military Museum Inc./Milo Valencic Date 3/20/2017

EVERSAFE

Building Design Specifications

Door and Window Locations

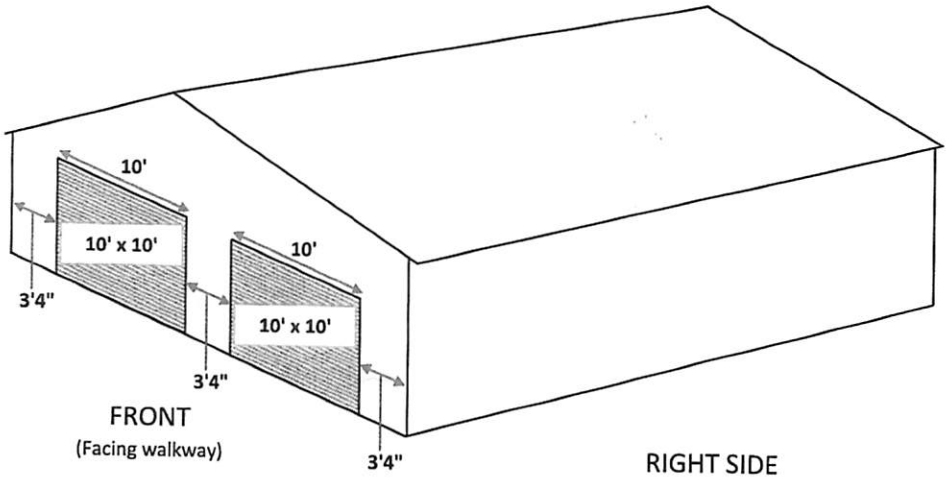

FRONT
(Facing walkway)

RIGHT SIDE

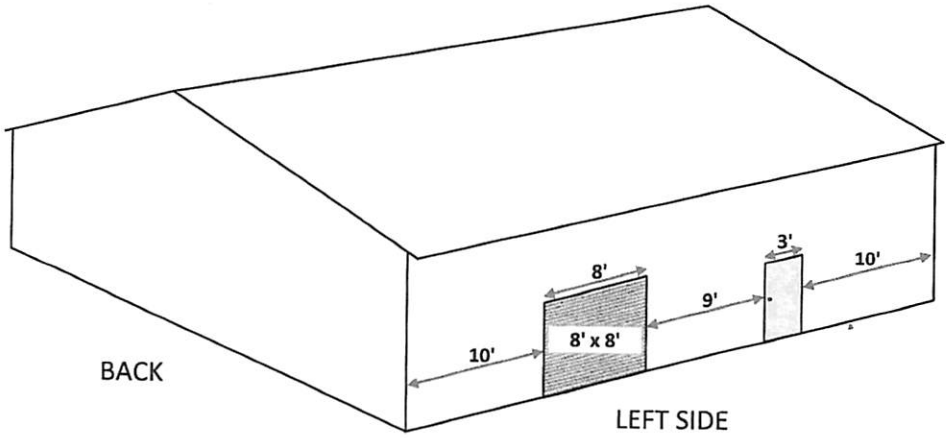

BACK

LEFT SIDE
(Facing Museum)

Roof Type

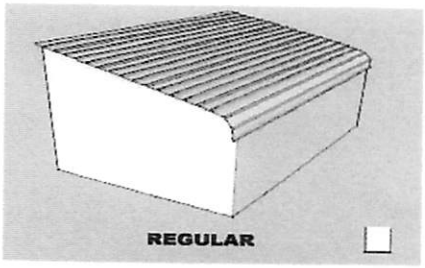

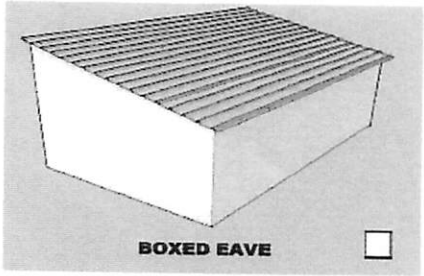

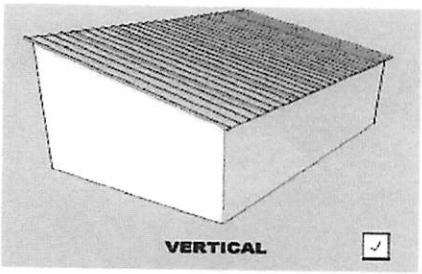

Side and End Steeting Type

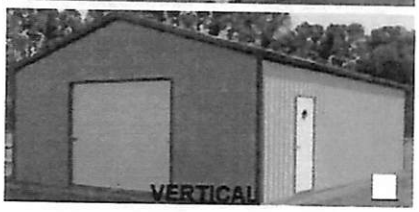

Signed DocuSigned by: Milo Valencic
Road To Victory Military Museum Inc./Milo Valencic

Date 3/21/2017

Color Chart

EVERSAFE
BUILT SAFE BUILT STRONG BUILT TO LAST

ROOF

SIDES

POLAR WHITE

IVORY

LIGHTSTONE

SAHARA TAN

ASH GRAY

TRIM

CLAY

HAWAIIAN BLUE

BRIGHT RED

BARN RED

BURGUNDY

COPPER PENNY

STEALTH BLACK

BURNISHED SLATE

COCOA BROWN

CHARCOAL

FOREST GREEN

1-800-374-7106

www.eversafebuildings.com

GALVALUME

AMERICAN MADE-AMERICAN PROUD

*Colors shown represent finish colors as accurately as possible, however color may vary slightly on actual building.
**Not all colors available in every state. Colors may vary by state. Please call for details.

BUILT SAFE BUILT STRONG BUILT TO LAST

Copyright © 2015 Eversafe Buildings

BECHTOL ENGINEERING AND TESTING, inc.

J&B BUILDING SERVICES, INC.

METAL UTILITY STRUCTURES
INSTALLATION PLANS, DETAILS, AND FASTENER SPECIFICATIONS FOR CONSTRUCTION IN THE STATE OF FLORIDA

ENCLOSED BUILDINGS

PREPARED FOR:
Carports Anywhere
PO Box 830
Swainsboro, Georgia 30401

PREPARED BY:
Bechtol Engineering and Testing, Inc.
605 West New York Avenue
DeLand, Florida 32720

THIS IS TO CERTIFY THAT THE FOLLOWING CALCULATIONS AND SPECIFICATIONS, SHEETS 1 THROUGH 11 OF 11, HAVE BEEN PREPARED BY THE UNDERSIGNED PROFESSIONAL ENGINEER, AND ARE IN ACCORDANCE WITH THE REQUIREMENTS OF CHAPTER 16 OF THE FLORIDA BUILDING CODE FIFTH EDITION (2014).

Bechtol Engineering & Testing, Inc.
Certificate of Authorization No. 00005492

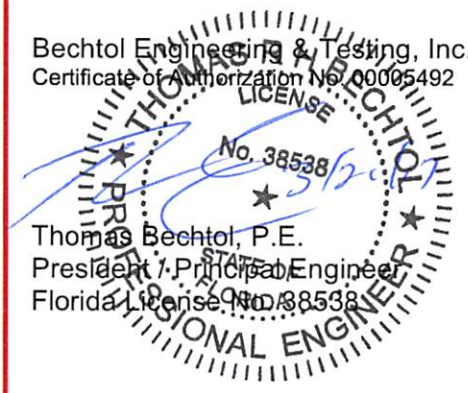

Thomas Bechtol, P.E.
President / Principal Engineer
Florida License No. 38538

CONSULTING GEOTECHNICAL, ENVIRONMENTAL, AND MATERIALS TESTING ENGINEERS
605 West New York Avenue, Suite A • DeLand, FL 32720-5243 • Telephone (386) 734-8444
FAX (386) 734-8541

☐ BOX EAVE FRAME RAFTER ENCLOSED BUILDING
(Sheets 2, 4, 5, 7, 8, 9, and 11)

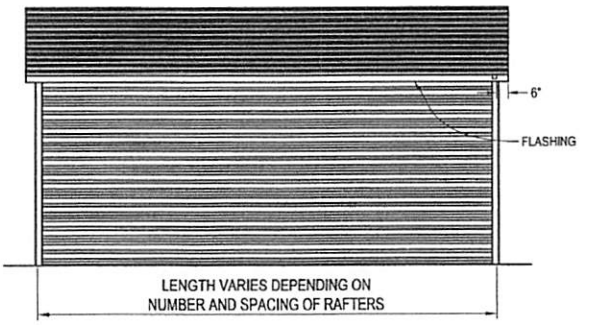

TYPICAL SIDE ELEVATION - HORIZONTAL ROOF

SCALE: 1/8" = 1'

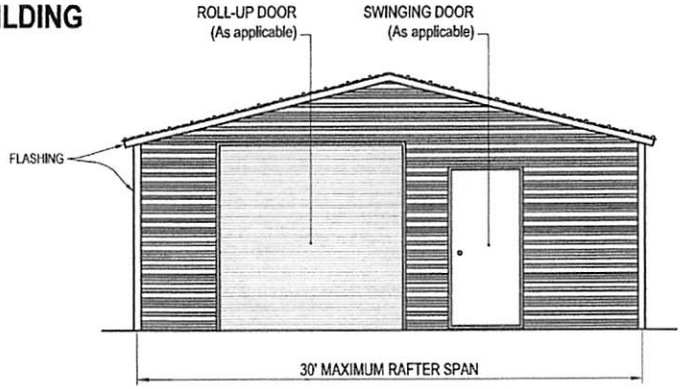

TYPICAL END ELEVATION - HORIZONTAL ROOF

SCALE: 1/8" = 1'

☐ BOW FRAME RAFTER ENCLOSED BUILDING
(Sheets 3, 4, 6, 7, 8, and 10)

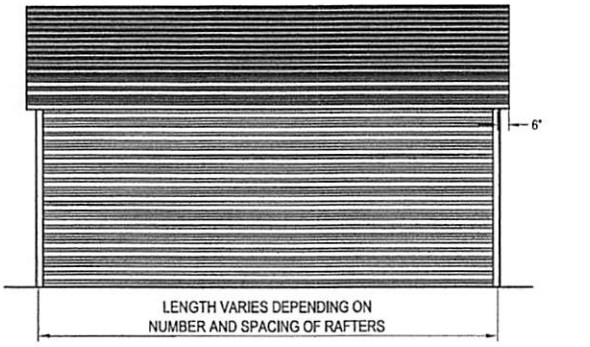

TYPICAL SIDE ELEVATION

SCALE: 1/8" = 1'

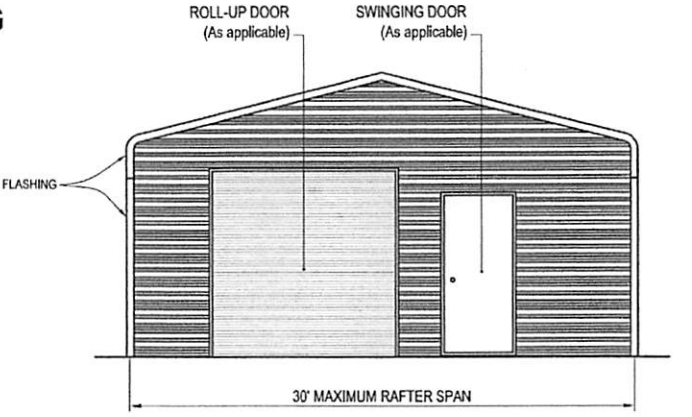

TYPICAL END ELEVATION

SCALE: 1/8" = 1'

METAL FRAMING AND SIDING PREFABRICATED BY
CARPORTS ANYWHERE
P.O. BOX 776
STARKE, FL 32091

THESE ENGINEERING DRAWINGS ARE THE PROPERTY OF BECHTOL ENGINEERING & TESTING, INC. AND J&B BUILDING SERVICES, INC. THESE DRAWING MAY NOT BE REPRODUCED WITHOUT THE WRITTEN CONSENT OF BECHTOL ENGINEERING & TESTING, INC., AND J&B BUILDING SERVICES, INC.

☐ 12 GAUGE TUBE STEEL
☐ 14 GAUGE TUBE STEEL

METAL UTILITY STRUCTURES - INSTALLATION PLANS, DETAILS, AND FASTENER SPECIFICATIONS

FOR CONSTRUCTION IN THE STATE OF
FLORIDA

PREPARED BY:

BECHTOL ENGINEERING AND TESTING, INC.
605 WEST NEW YORK AVENUE
DELAND, FLORIDA 32720
Certificate of Authorization No. 5492

GENERAL NOTES:

1. RISK CATEGORY I OR II.
2. WIND EXPOSURE CATEGORY B OR C.
3. ULTIMATE WIND SPEED 115 TO 150 MPH (NOMINAL WIND SPEED 89 TO 116 MPH): MAXIMUM RAFTER/POST AND END POST SPACING= 5.0 FEET.
4. ULTIMATE WIND SPEED 151 TO 180 MPH (NOMINAL WIND SPEED 117 TO 139 MPH): MAXIMUM RAFTER/POST AND END POST SPACING =4.0 FEET.
5. AVERAGE FASTENER SPACING ON-CENTERS ALONG RAFTERS OR PURLINS, AND POSTS (INTERIOR OR END)= 6 INCHES.
6. SPECIFICATIONS APPLICABLE TO 26 GAUGE METAL PANELS FASTENED DIRECTLY TO 12 OR 14 GAUGE STEEL TUBE RAFTER FRAMES.
7. ALL STEEL TUBING SHALL BE 50 KSI STEEL.
8. FASTEN METAL ROOF AND WALL PANELS TO FRAMING WITH #12-14 x 3/4" SELF DRILLING FASTENERS WITH CONTROL SEAL WASHER @ 6" O.C. AVERAGE.
9. ALL FRAMING CONNECTIONS SHALL BE #12-14 x 3/4" SELF-DRILLING SCREWS WITHOUT CONTROL SEAL WASHER.
10. ALL SHOP CONNECTIONS SHALL BE WELDED.
11. SPECIFICATIONS APPLICABLE ONLY FOR MEAN ROOF HEIGHT OF 20 FEET OR LESS, AND ROOF SLOPES OF 14° (3:12 PITCH). SPACING REQUIREMENTS FOR OTHER ROOF HEIGHTS AND/OR SLOPES MAY VARY.
12. BASE RAIL GROUND ANCHOR REQUIREMENTS ARE ONE WITHIN 6" OF EVERY POST LOCATION, AND BOTH SIDES OF OPENINGS WHERE BASE RAIL IS ABSENT. GROUND ANCHORS ARE NOT REQUIRED WITH CONCRETE SLAB CONSTRUCTION.
13. CONCRETE EXPANSION ANCHORS SHALL BE WEJ-IT ANKR-TITE MODEL AT1252, OR SLEEVE ANCHOR MODEL HSA 1260, OR EQUIVALENT.
14. POST/RAFTER BRACING: BRACE ON EVERY POST/RAFTER CONNECTION, EXCEPT FOR END WALLS.

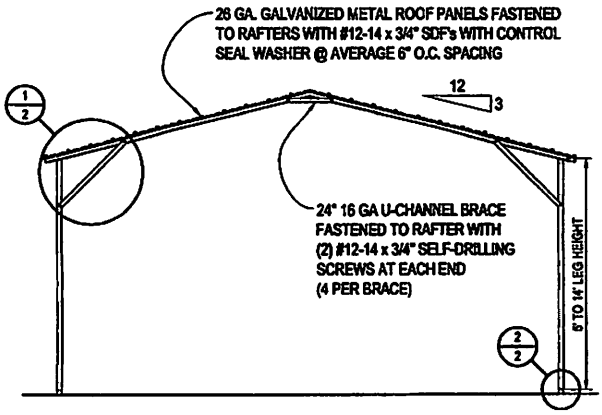

TYPICAL RAFTER/POST FRAME SECTION

SCALE: 1/8" = 1'

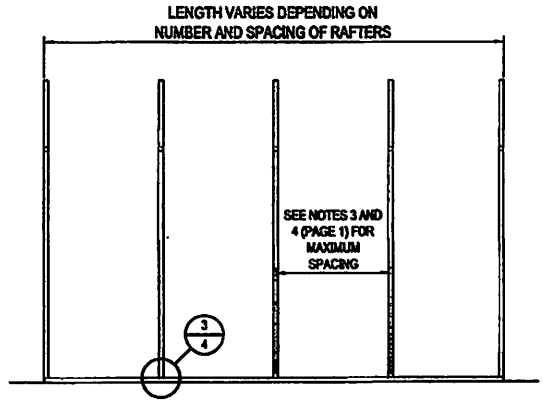

TYPICAL RAFTER/POST FRAMING PLAN

SCALE: 1/8" = 1'

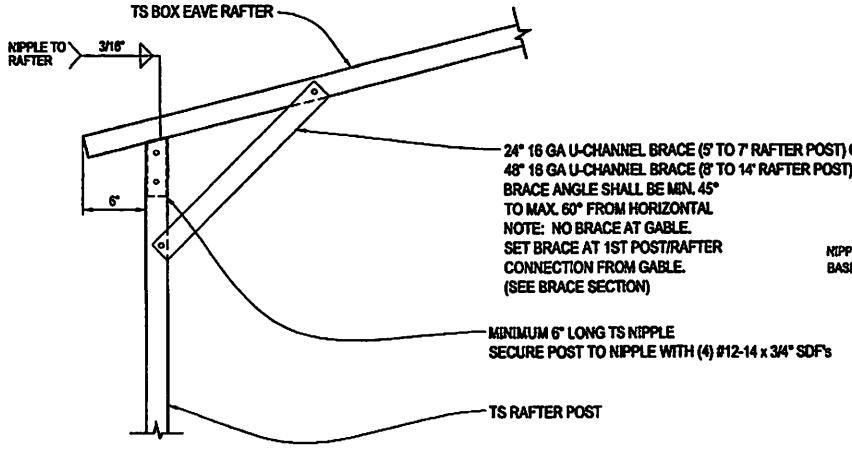

1 BOX EAVE RAFTER/CORNER POST CONNECTION DETAIL

Not To Scale

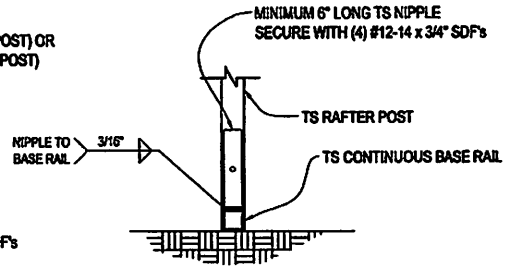

2 RAFTER POST/ BASE RAIL CONNECTION DETAIL

Not To Scale

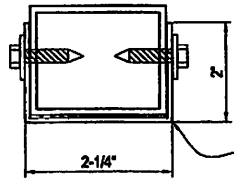

BRACE SECTION

Not To Scale

BECHTOL ENGINEERING AND TESTING, inc.
CONSULTING GEOTECHNICAL, ENVIRONMENTAL, AND MATERIALS TESTING ENGINEERS
Certificate of Authorization No. 5492

J&B BUILDING SERVICES, INC.

FIELD:	CHECKED: JP	DATE: 2/24/17	PROJ. NO.: G17002
DRAWN: RR	APPROVED: TB	SCALE: NOTED	SHEET 2 OF 11

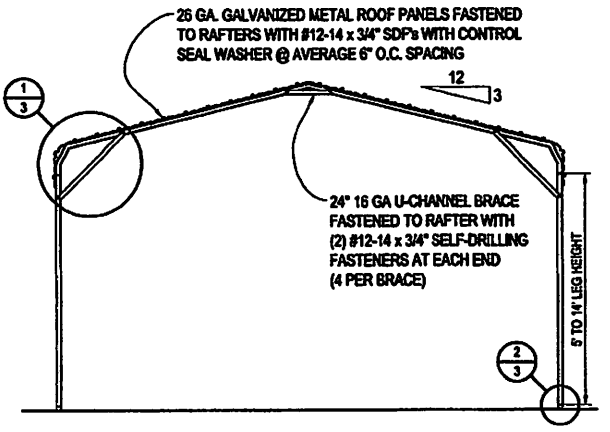

TYPICAL RAFTER/POST FRAME SECTION

SCALE: 1/8" = 1'

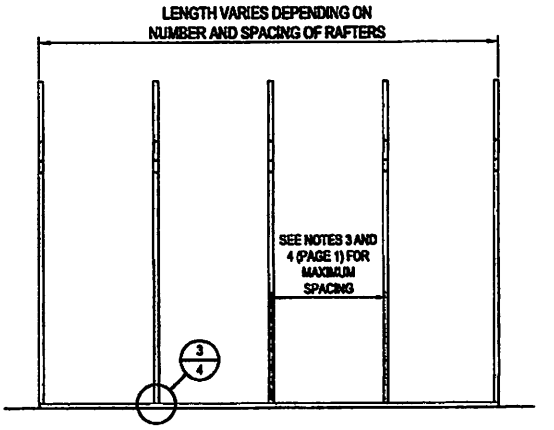

TYPICAL RAFTER/POST FRAMING PLAN

SCALE: 1/8" = 1'

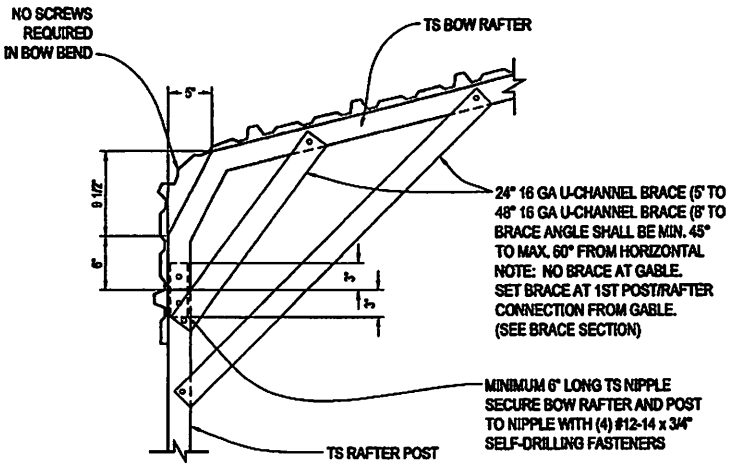

1 BOW RAFTER/CORNER POST CONNECTION DETAIL

Not To Scale

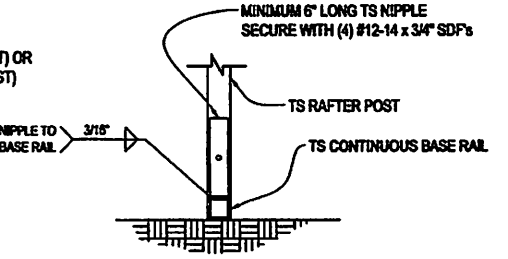

2 RAFTER POST/ BASE RAIL CONNECTION DETAIL

Not To Scale

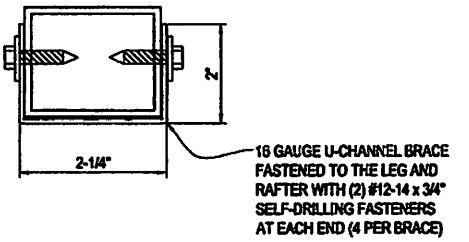

BRACE SECTION

Not To Scale

BECHTOL ENGINEERING AND TESTING, inc.

CONSULTING GEOTECHNICAL, ENVIRONMENTAL, AND MATERIALS TESTING ENGINEERS

Certificate of Authorization No. 5492

J&B BUILDING SERVICES, INC.

FIELD:	CHECKED: JP	DATE: 2/24/17	PROJ. NO.: G17002
DRAWN: RR	APPROVED: TB	SCALE: NOTED	SHEET 3 OF 11

BASE RAIL ANCHORAGE OPTIONS

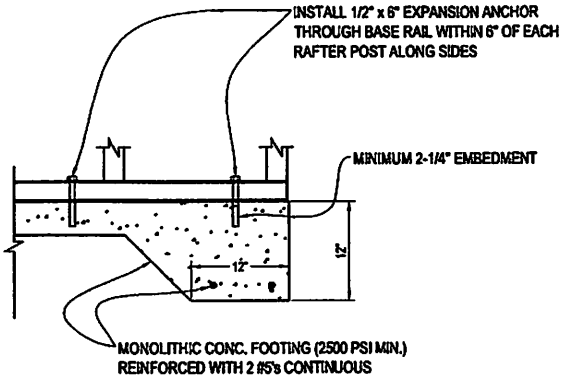

3A CONCRETE MONO. SLAB BASE RAIL ANCHORAGE
Not To Scale

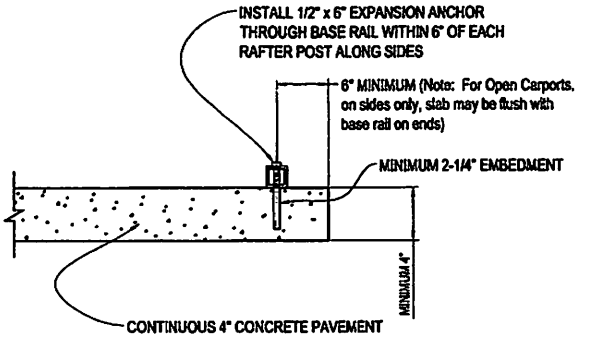

3B CONCRETE SLAB BASE RAIL ANCHORAGE
Not To Scale (OPTIONAL - OPEN CARPORTS ONLY)

CONCRETE:
Concrete Shall Have a Minimum Specified Compressive Strength of 2500 PSI at 28 Days.

COVER OVER REINFORCING STEEL
For foundations, minimum concrete cover over reinforcing bars shall be:
3 inches in foundations where the concrete is cast against and permanently in contact with the earth or exposed to the earth or weather, and 1-1/2 inches elsewhere. Reinforcing bars embedded in grouted cells shall have a minimum clear distance of 1/4 inch for fine grout or 1/2 inch for coarse grout between reinforcing bars and any face of a cell. Reinforcing bars used in masonry walls shall have a masonry cover (including grout) of not less than 2 inches for masonry units with face exposed to earth or weather 1-1/2 inches for masonry units not exposed to earth or weather.

REINFORCING STEEL:
The reinforcing steel shall be minimum Grade 40.

GALVANIZATION:
Metal accessories for use in exterior wall construction and not directly exposed to the weather shall be galvanized in accordance with ASTM A 153, Class B-2. Metal plate connectors, screws, bolts and nails exposed directly to the weather shall be stainless steel or hot dipped galvanized.

REINFORCEMENT MAY BE BENT IN THE SHOP OR THE FIELD PROVIDED:
1. All reinforcement is bent cold;
2. The diameter of the bend, measured on the inside of the bar, is not less than six-bar diameters; and
3. Reinforcement partially embedded in concrete shall not be field bent.

EXCEPTION:
Where bending is necessary to align dowel bars with a vertical cell, bars partially embedded in concrete shall be permitted to be bent at a slope of not more than 1 inch of horizontal displacement to 6 inches of vertical bar length.

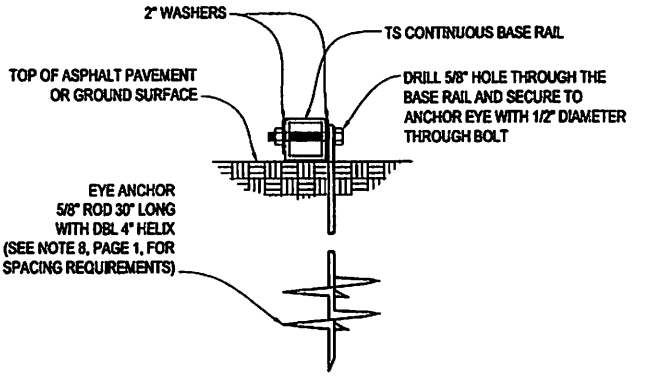

3C GROUND BASE RAIL ANCHORAGE
Not To Scale (CAN BE USED FOR ASPHALT)

BECHTOL ENGINEERING AND TESTING, Inc.
CONSULTING GEOTECHNICAL, ENVIRONMENTAL, AND MATERIALS TESTING ENGINEERS
Certificate of Authorization No. 5492

J&B BUILDING SERVICES, INC.

FIELD:	CHECKED: JP	DATE: 2/24/17	PROJ. NO.: G17002
DRAWN: RR	APPROVED: TB	SCALE: NOTED	SHEET 4 OF 11

BOX EAVE RAFTER END WALL AND WALL OPENINGS

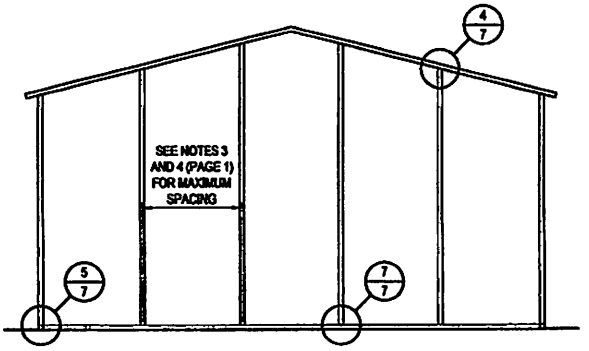

TYPICAL BOX EAVE RAFTER END WALL FRAMING PLAN

SCALE: 1/8" = 1'

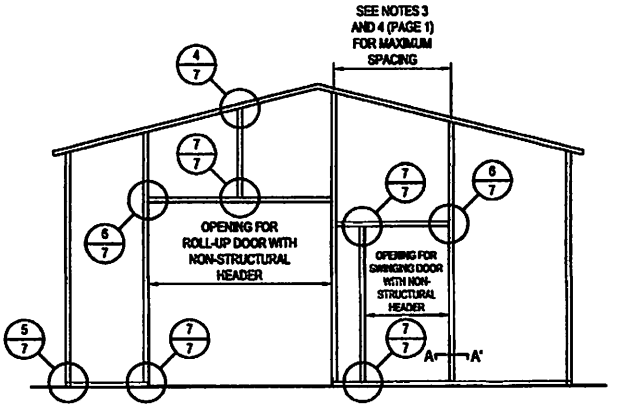

TYPICAL BOX EAVE RAFTER END WALL OPENINGS FRAMING PLAN

SCALE: 1/8" = 1'

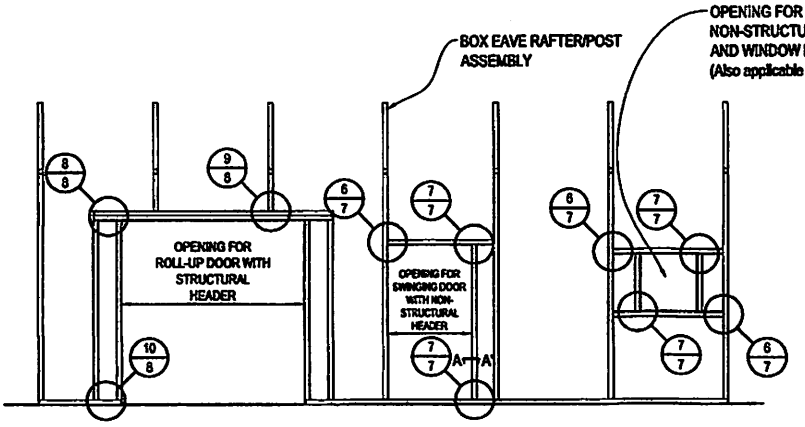

TYPICAL BOX EAVE RAFTER SIDE WALL OPENINGS FRAMING PLAN

SCALE: 1/8" = 1'

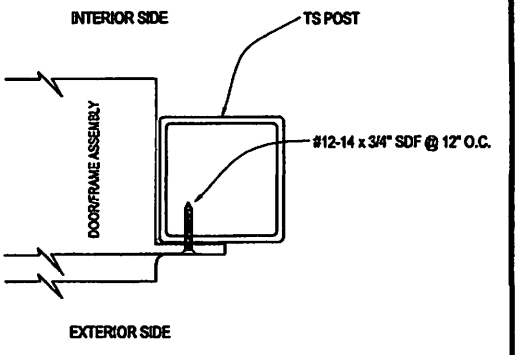

SECTION A-A'

Not To Scale

BECHTOL ENGINEERING AND TESTING, inc.

CONSULTING GEOTECHNICAL, ENVIRONMENTAL, AND MATERIALS TESTING ENGINEERS

Certificate of Authorization No. 5492

J&B BUILDING SERVICES, INC.

FIELD:	CHECKED: JP	DATE: 2/24/17	PROJ. NO.: G17002
DRAWN: RR	APPROVED: TB	SCALE: NOTED	SHEET 5 OF 11

BOW RAFTER END WALL AND WALL OPENINGS

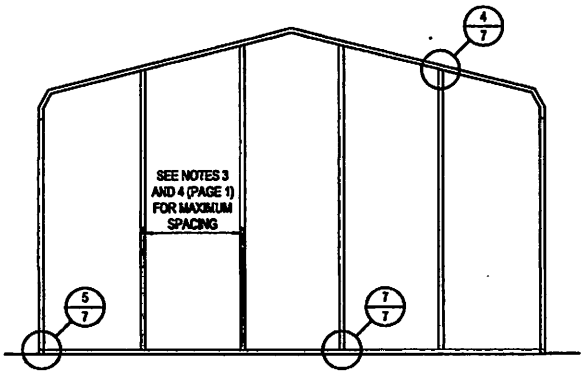

TYPICAL BOW RAFTER END WALL FRAMING PLAN

SCALE: 1/8" = 1'

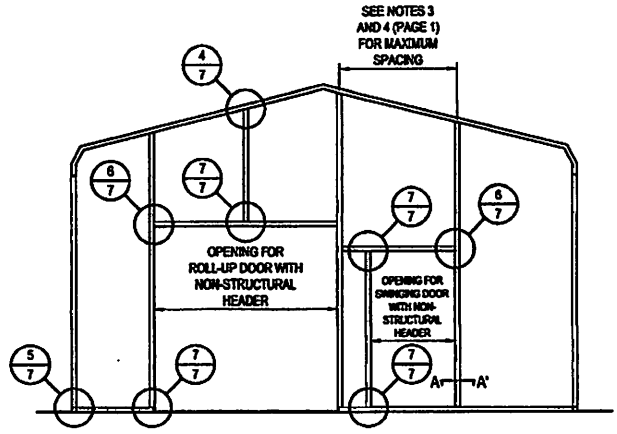

TYPICAL BOW RAFTER END WALL OPENINGS FRAMING PLAN

SCALE: 1/8" = 1'

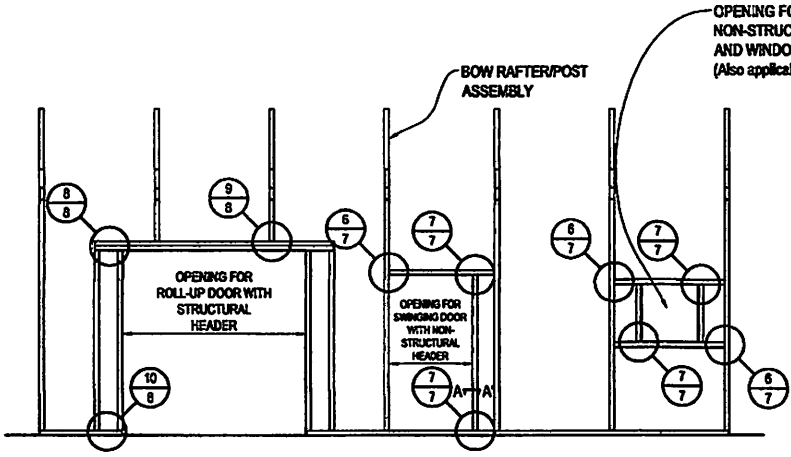

TYPICAL BOW RAFTER SIDE WALL OPENINGS FRAMING PLAN

SCALE: 1/8" = 1'

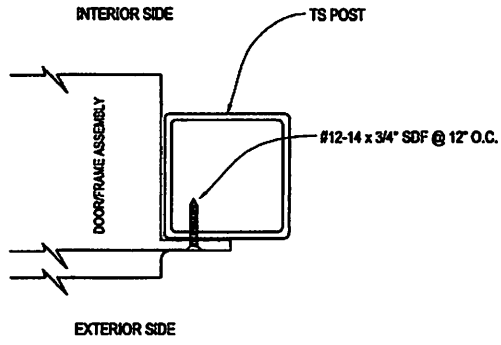

SECTION A-A'

Not To Scale

BECHTOL ENGINEERING AND TESTING, inc.

CONSULTING GEOTECHNICAL, ENVIRONMENTAL, AND MATERIALS TESTING ENGINEERS

Certificate of Authorization No. 5492

J&B BUILDING SERVICES, INC.

FIELD:	CHECKED: JP	DATE: 2/24/17	PROJ. NO.: G17002
DRAWN: RR	APPROVED: TB	SCALE: NOTED	SHEET 6 OF 11

BOX EAVE RAFTER WALL OPENING DETAILS

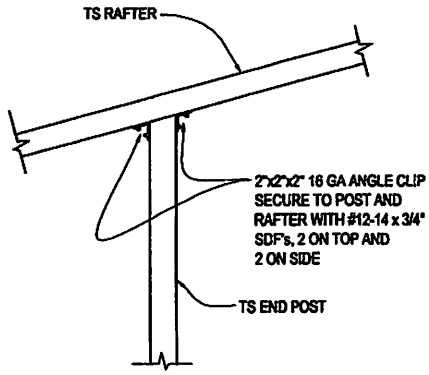

4 END POST/RAFTER CONNECTION DETAIL
Not To Scale

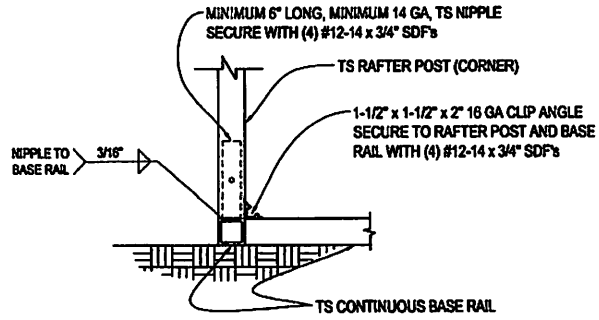

5 END POST/BASE RAIL CONNECTION DETAIL
Not To Scale

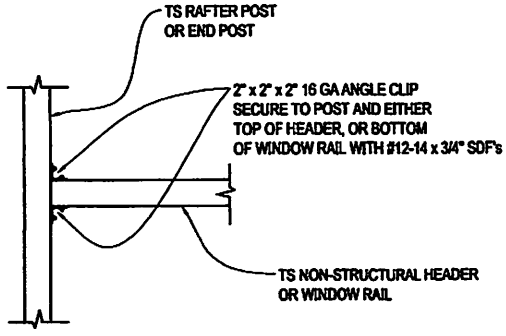

6 NON-STRUCTURAL HEADER OR WINDOW RAIL TO POST CONNECTION DETAIL
Not To Scale

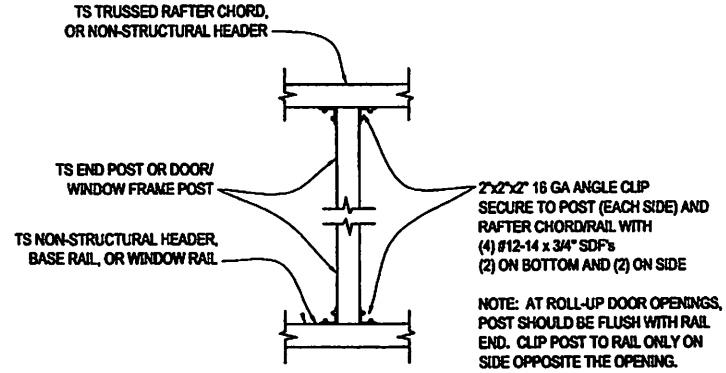

7 POST TO NON-STRUCTURAL HEADER, BASE RAIL, OR WINDOW RAIL CONNECTION DETAIL
Not To Scale

BECHTOL ENGINEERING AND TESTING, inc.
CONSULTING GEOTECHNICAL, ENVIRONMENTAL, AND MATERIALS TESTING ENGINEERS
Certificate of Authorization No. 5492

J&B BUILDING SERVICES, INC.

FIELD:	CHECKED: JP	DATE: 2/24/17	PROJ. NO.: G17002
DRAWN: RR	APPROVED: TB	SCALE: NOTED	SHEET 7 OF 11

BOX EAVE RAFTER WALL OPENING DETAILS

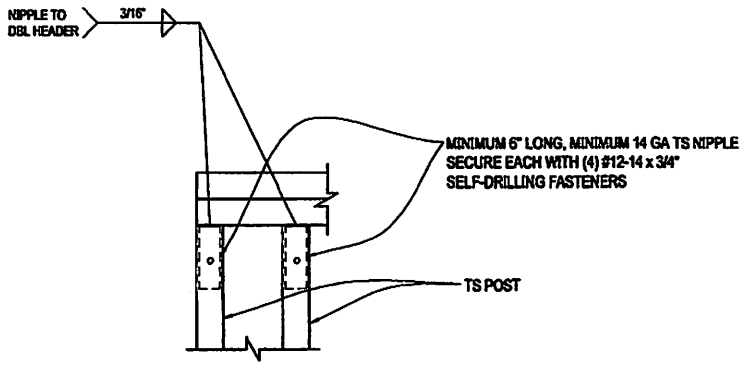

8 DBL HEADER/POST CONNECTION DETAIL
Not To Scale

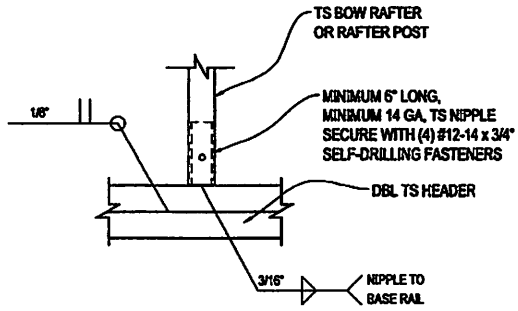

9 RAFTER POST/DBL HEADER CONNECTION DETAIL
Not To Scale

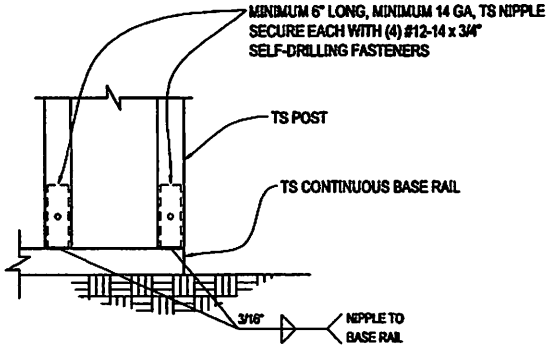

10 RAFTER POST/BASE RAIL CONNECTION DETAIL
Not To Scale

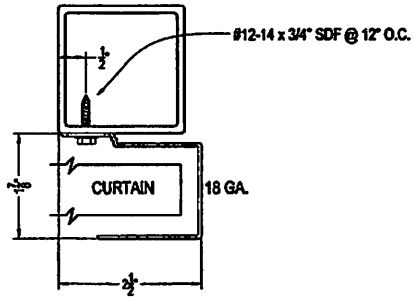

SECTION THROUGH ROLL UP DOOR HEADER
Not To Scale

NOTE: Curtain is 26 GA. galvanized steel with baked on epoxy primer & polyester top coat.

BECHTOL ENGINEERING AND TESTING, inc.
CONSULTING GEOTECHNICAL, ENVIRONMENTAL, AND MATERIALS TESTING ENGINEERS
Certificate of Authorization No. 5492

J&B BUILDING SERVICES, INC.

FIELD:	CHECKED: JP	DATE: 2/24/17	PROJ. NO.: G17002
DRAWN: RR	APPROVED: TB	SCALE: NOTED	SHEET 8 OF 11

BOX EAVE RAFTER LEAN-TO OPTIONS

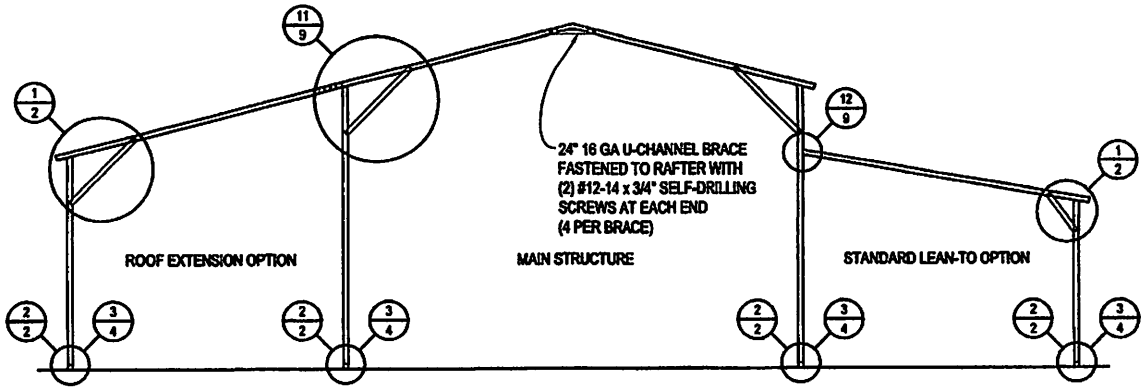

TYPICAL BOX EAVE RAFTER LEAN-TO OPTIONS FRAMING PLAN (BOTH OPTIONS SHOWN)

SCALE: 1/8" = 1'

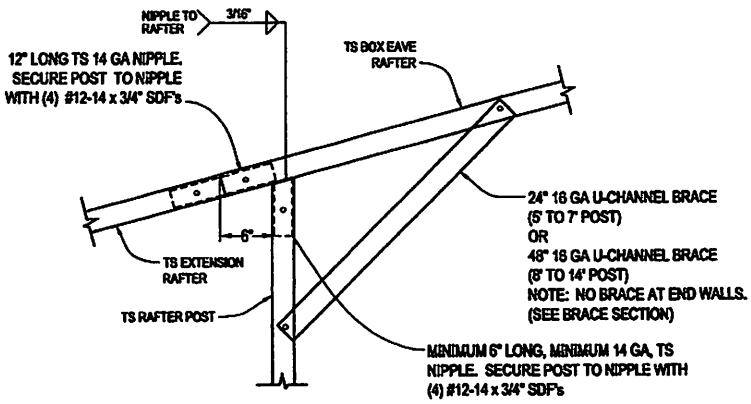

11 SIDE EXTENSION RAFTER/ CORNER POST DETAIL

Not To Scale

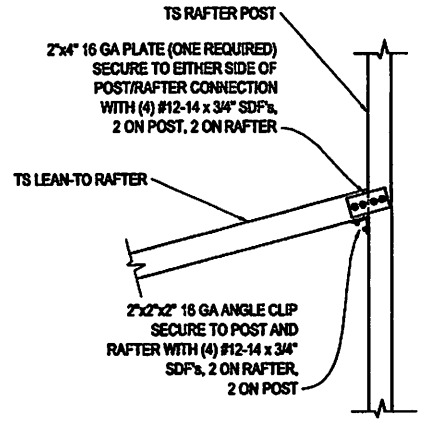

12 LEAN-TO RAFTER TO RAFTER POST CONNECTION DETAIL

Not To Scale

BECHTOL ENGINEERING AND TESTING, inc.

CONSULTING GEOTECHNICAL, ENVIRONMENTAL, AND MATERIALS TESTING ENGINEERS

Certificate of Authorization No. 5492

J&B BUILDING SERVICES, INC.

FIELD:	CHECKED: JP	DATE: 2/24/17	PROJ. NO.: G17002
DRAWN: RR	APPROVED: TB	SCALE: NOTED	SHEET 9 OF 11

BOW RAFTER LEAN-TO OPTION

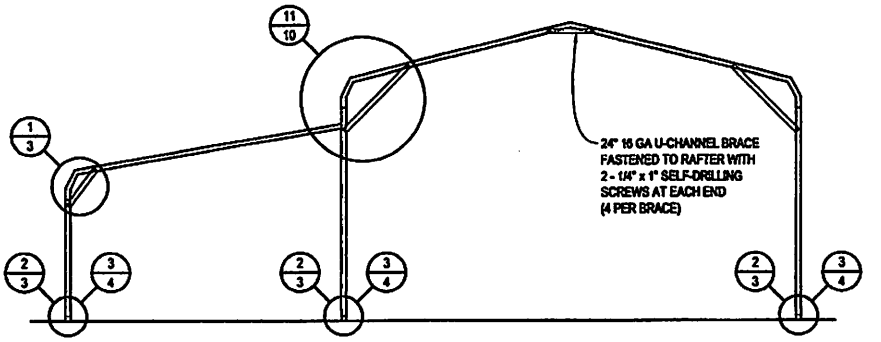

TYPICAL BOW RAFTER LEAN-TO OPTION FRAMING PLAN

SCALE: 1/8" = 1'

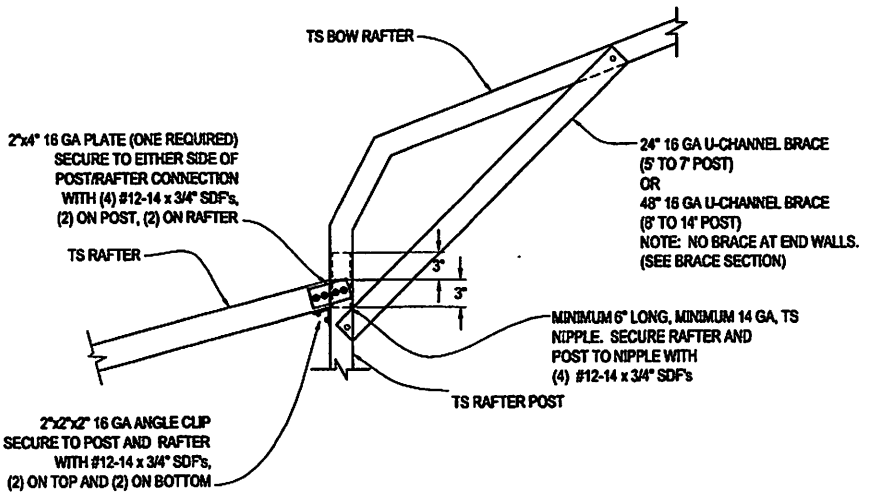

11 LEAN-TO RAFTER TO RAFTER POST CONNECTION DETAIL

Not To Scale

BECHTOL ENGINEERING AND TESTING, inc.

CONSULTING GEOTECHNICAL, ENVIRONMENTAL, AND MATERIALS TESTING ENGINEERS

Certificate of Authorization No. 5492

J&B BUILDING SERVICES, INC.

FIELD:	CHECKED: JP	DATE: 2/24/17	PROJ. NO.: G17002
DRAWN: RR	APPROVED: TB	SCALE: NOTED	SHEET 10 OF 11

BOX EAVE RAFTER VERTICAL ROOF OPTION

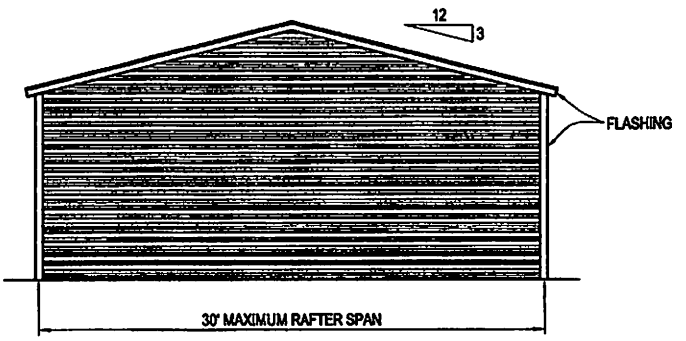

TYPICAL END ELEVATION - VERTICAL ROOF

SCALE: 1/8" = 1'

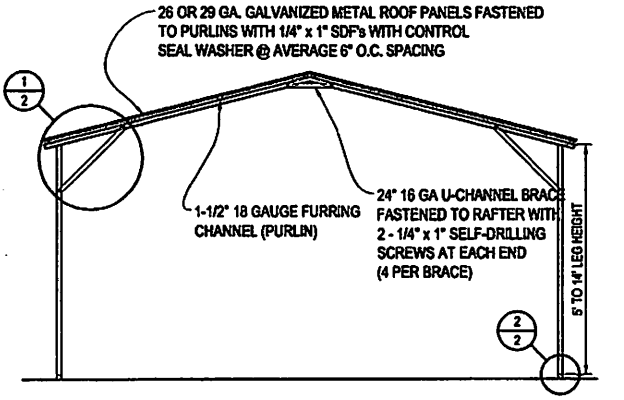

TYPICAL SECTION - VERTICAL ROOF OPTION

SCALE: 1/8" = 1'

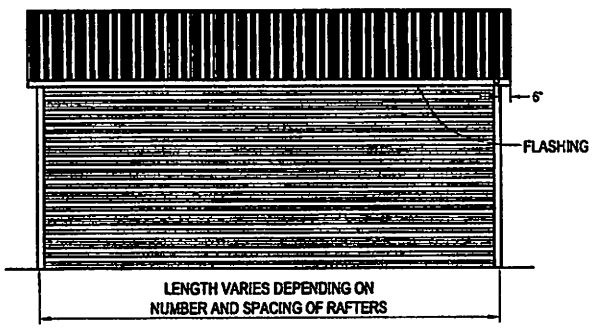

TYPICAL SIDE ELEVATION - VERTICAL ROOF

SCALE: 1/8" = 1'

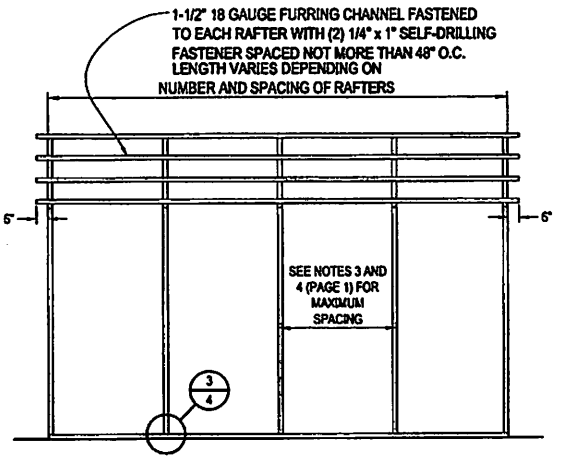

TYPICAL FRAMING PLAN - VERTICAL ROOF OPTION

SCALE: 1/8" = 1'

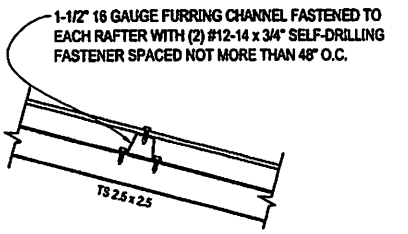

ROOF PANEL ATTACHMENT

(ALTERNATE FOR VERTICAL ROOF PANELS)

Not To Scale

BECHTOL ENGINEERING AND TESTING, inc.

CONSULTING GEOTECHNICAL, ENVIRONMENTAL, AND MATERIALS TESTING ENGINEERS

Certificate of Authorization No. 5492

J&B BUILDING SERVICES, INC.

FIELD:	CHECKED: JP	DATE: 2/24/17	PROJ. NO.: G17002
DRAWN: RR	APPROVED: TB	SCALE: NOTED	SHEET 11 OF 11

FLORIDA APPROVED PRODUCTS LIST

FLORIDA BUILDING CODE FIFTH EDITION (2014)

Carports Anywhere, Inc.

PO Box 778

Starke, Florida 32091

CLADDING/COMPONENT	MANUFACTURER	MODEL NO.	FPA NO.	APPROVAL DATE	EXPIRATION DATE	MAX. PRESSURES	
ROOF PANEL ON OPEN 14 GA. FRAME	UNION CORRUGATING CO.	26 GA. MASTER RIB	FL9555.2-R4	10/16/2015	12/31/2020	-47.2	FRAME @ 5' OC
						-58.9	FRAME @ 4' OC
WALL PANEL ON OPEN 14 GA. FRAME	UNION CORRUGATING CO.	26 GA. MASTER RIB	FL9555.2-R4	10/16/2015	12/31/2020	-47.2	FRAME @ 5' OC
						-58.9	FRAME @ 4' OC
WINDOW	POCAHONTAS ALUMINUM CO.	100VS (30"x30")	FL12940.2-R4	01/07/2016	11/30/2020	+35/-35	
WINDOW	MI WINDOWS AND DOORS	185SH (IMPACT RES)	FL17499.3-R1	08/05/2016	10/17/2018	+55/-55	
SWINGING DOOR (14"x14" Window)	ELIXIR DOOR & METAL CO.	402-14	FL17996.3	09/07/2015	09/14/2020	+40/-40	
SWINGING DOOR (Blank-No Window)	ELIXIR DOOR & METAL CO.	407	FL17996.5	09/07/2015	09/14/2020	+40/-45	
ROLL-UP DOOR	ASTA DOOR CORPORATION	203 WINDLOCK	FL8888.1-R4	05/31/2015	12/31/2018	+113.1/-113.1	8 FT. WIDTH
						+ 91.4/-91.4	9 FT. WIDTH
						+76.0/-76.0	10 FT. WIDTH
						+64.6/-64.6	11 FT. WIDTH
						+55.8/-55.8	12 FT. WIDTH

CITY OF STUART, FLORIDA
AGENDA ITEM REQUEST
CITY COMMISSION

Meeting Date:5/22/2017 **Prepared by:**Alaina Knofla

Title of Item:

RESOLUTION No. 57-2017; A RESOLUTION OF THE CITY COMMISSION OF THE CITY OF STUART, FLORIDA TO APPROVE THE AWARD OF ITB #2017-317, SHEPARD PARK RESTROOM FACILITY PROJECT TO THE LOWEST, MOST RESPONSIVE RESPONSIBLE BIDDER FOR THE LUMP SUM TOTAL OF $142,590.00 TO ONE CALL PROPERTY SERVICES, INCORPORATED OF STUART, FLORIDA, PROVIDING AN EFFECTIVE DATE; AND FOR OTHER PURPOSES. (RC)

Summary Explanation/Background Information on Agenda Request:

This solicitation was advertised in the Stuart News on March 28, 2017. The ITB was also posted on DemandStar by Onvia, the City's on-line bid disseminator. The Procurement Office sent notification to six (6) vendors who expressed interest in providing this service to the City of Stuart. Onvia (DemandStar) notified Seven hundred and seventy-nine (779) potential bidders and issued fifteen (15) bid packages for this project. Two (2) bids were received by the bid opening date and time of 2:30 pm, April 19, 2017.

Public Works staff has checked references and recommends award to the lowest responsive and responsible bidder, One Call Property Services, Inc., Stuart, Florida for the Lump Sum total of $142,590.00; and authorization to execute final agreement subsequent to review and approval by City Attorney.

Funding Source:

Funds are available in 1240 R562 (Project No's: PWI00281 and PWG00281)

Recommended Action:

Adopt Resolution No. 57-2017

ATTACHMENTS:

	Description	Upload Date	Type
🗋	R57-2017	5/11/2017	Resolution add to Y drive
🗋	Department Award Recommendation	5/12/2017	Cover Memo
🗋	Bid Tabulation	5/12/2017	Backup Material
🗋	Department Award Recommendation	5/12/2017	Backup Material

BEFORE THE CITY COMMISSION
CITY OF STUART, FLORIDA

RESOLUTION NUMBER 57-2017

A RESOLUTION OF THE CITY COMMISSION OF THE CITY OF STUART, FLORIDA TO APPROVE THE AWARD OF ITB #2017-317, SHEPARD PARK RESTROOM FACILITY PROJECT TO THE LOWEST, MOST RESPONSIVE RESPONSIBLE BIDDER FOR THE LUMP SUM TOTAL OF $142,590.00 TO ONE CALL PROPERTY SERVICES, INCORPORATED OF STUART, FLORIDA, PROVIDING AN EFFECTIVE DATE; AND FOR OTHER PURPOSES.

* * * * *

NOW THEREFORE, BE IT RESOLVED BY THE CITY COMMISSION OF THE CITY OF STUART, FLORIDA that:

SECTION 1: The City Commission of the City of Stuart hereby approves the award of ITB #2017-317, Shepard Park Restroom Facility Project to the lowest, most responsive and responsible bidder, One Call Property Services, Inc., Stuart, Florida, for the Lump Sum total of $142,590.00; and authorization to execute final agreement subsequent to review and approval by City Attorney.

SECTION 2: This resolution shall take effect upon adoption.

Resolution No. 57-2017
Award of ITB #2017-317, Shepard Park Restroom Facility Project

ADOPTED this 22nd day of May 2017.

Commissioner _____ offered the foregoing resolution and moved its adoption. The motion was seconded by Commissioner _____ and upon being put to a roll call vote, the vote was as follows:

	YES	NO	ABSENT
TOM CAMPENNI, MAYOR			
TROY MCDONALD, VICE-MAYOR			
KELLI GLASS LEIGHTON, COMMISSIONER			
JEFFREY KRAUSKOPF, COMMISSIONER			
EULA R. CLARKE, COMMISSIONER			

ATTEST:

_____
CHERYL WHITE
CITY CLERK

_____
TOM CAMPENNI
MAYOR

APPROVED AS TO FORM
AND CORRECTNESS:

_____
MICHAEL J. MORTELL
CITY ATTORNEY

Darden, Lenora

From: Voelker, Timothy
Sent: Monday, May 01, 2017 3:56 PM
To: Darden, Lenora
Cc: Amerson, Sam; Rogolino, Marc; Leggett, Milton; Jones, LeeAnn
Subject: RE: Shepard Park Restroom Project

Follow Up Flag: Follow up
Flag Status: Flagged

Lenora-

After reviewing the bid form and based on the bid amount of $142,590.00, Public Works recommends that the contract for ITB# 2017-317 Shepard Park Restroom Project be awarded to One Call Property Services, Inc.

Let me know if you have any questions or need any additional information.

Tim

Tim Voelker, P.E.
City Engineer
121 SW Flagler Avenue
Stuart, Florida 34994
Office: (772) 288-5332
Cell: (772) 215-9602
Fax: (772) 288-5381
www.cityofstuart.us

From: Darden, Lenora
Sent: Saturday, April 29, 2017 10:36 AM
To: Amerson, Sam
Cc: Voelker, Timothy; Jones, LeeAnn
Subject: Shepard Park Restroom Project

Good morning,

Please find the attached recommendation for your review and approval.

Thank you

Lenora S. Darden, ***CPPB***
Procurement Manager
City of Stuart
Procurement &Contracting Services Division
121 SW Flagler Avenue, Stuart, FL 34994-2172
Email: ldarden@ci.stuart.fl.us
Phone: (772) 288-5308 Fax: (772) 600-0134

Please Note: Florida has a broad public records law. Most written communications to or from City officials regarding City business are public records available to the public and media upon request. Your e-mail communications may be subject to public disclosure.

City of Stuart

ITB TABULATION

121 SW Flagler Avenue, Stuart, FL 34994
Department of Financial Services
Procurement & Contracting Services Division

Lenora Darden, CPPB
Procurement Manager
Email: purchasing@ci.stuart.fl.us
Telephone (772) 288-5320
Fax: (772) 600-0134
www.cityofstuart.us

ITB #	2017-317
Project:	**Shepard Park Restroom Project**
Addendum:	**N/A**
Date Opened:	**4/19/2017**
Completion Days:	**120**
Engineers Estimate:	**$142,590.00**
Apparent Low Bidder	**One Call Property Services, Inc.**
No Bid:	**N/A**
Planholders for this bid:	**15**
Broadcast List of Notified **S**uppliers	**779**
Supplemental Suppliers	**6**

	Firms Submitting Bids:	**Lump Sum**	**P-Card**	**10% Bid Bond**
		Total	**Yes or No**	**Yes or No**
1	One Call Property Services, Inc.	$142,590.00	N	Y
2	Hennis Construction Company Inc.	$174,000.00	N	Y

Darden, Lenora

From: Voelker, Timothy
Sent: Monday, May 01, 2017 3:56 PM
To: Darden, Lenora
Cc: Amerson, Sam; Rogolino, Marc; Leggett, Milton; Jones, LeeAnn
Subject: RE: Shepard Park Restroom Project

Follow Up Flag: Follow up
Flag Status: Flagged

Lenora-

After reviewing the bid form and based on the bid amount of $142,590.00, Public Works recommends that the contract for ITB# 2017-317 Shepard Park Restroom Project be awarded to One Call Property Services, Inc.

Let me know if you have any questions or need any additional information.

Tim

Tim Voelker, P.E.
City Engineer
121 SW Flagler Avenue
Stuart, Florida 34994
Office: (772) 288-5332
Cell: (772) 215-9602
Fax: (772) 288-5381
www.cityofstuart.us

From: Darden, Lenora
Sent: Saturday, April 29, 2017 10:36 AM
To: Amerson, Sam
Cc: Voelker, Timothy; Jones, LeeAnn
Subject: Shepard Park Restroom Project

Good morning,

Please find the attached recommendation for your review and approval.

Thank you

Lenora S. Darden, ***CPPB***
Procurement Manager
City of Stuart
Procurement &Contracting Services Division
121 SW Flagler Avenue, Stuart, FL 34994-2172
Email: ldarden@ci.stuart.fl.us
Phone: (772) 288-5308 Fax: (772) 600-0134

Please Note: Florida has a broad public records law. Most written communications to or from City officials regarding City business are public records available to the public and media upon request. Your e-mail communications may be subject to public disclosure.

CITY OF STUART, FLORIDA
AGENDA ITEM REQUEST
CITY COMMISSION

Meeting Date: 5/22/2017 **Prepared by:** Tom Reetz

Title of Item:
RESOLUTION No. 58-2017; A RESOLUTION OF THE CITY COMMISSION OF THE CITY OF STUART, FLORIDA TO APPROVE A PLAT TITLED "WAWA/TD BANK OF DOWNTOWN STUART", PREPARED BY ROBERT BLOOMSTER JR., FLORIDA PROFESSIONAL SURVEYOR AND MAPPER No. 4134 PROVIDING FOR AN EFFECTIVE DATE; AND FOR OTHER PURPOSES. (RC)

Summary Explanation/Background Information on Agenda Request:
The applicant, TD Bank/Wawa has received Minor Final Site Plan Approval to develop a new TD Bank building and a Wawa convenience store and gas station located on the corner of Johnson Avenue and US1. The property was not approved as a PUD but is administratively adhering to the Land Development Code's B-2 zoning. Staff has included a Site/Landscape Plan for the Commission's edification. (The existing two-story TD bank building will be demolished in order to make room for the buildings to occur in two phases, first TD's new branch building and then Wawa's convenience store and gas station).

A condition of the Minor Final Site Plan Approval requires plat approval prior to any future development permit being issued. The applicant is now seeking approval of a plat for the "TD Bank/Wawa" project.

The City's Consultant, Northstar Geometrics has reviewed the plat for consistency with Chapter 177, Florida Statutes and the City's Land Development Code and provided comments which the applicant has addressed.

Funding Source:
N/A

Recommended Action:
Approve Resolution No. 58-2017.

ATTACHMENTS:

	Description	Upload Date	Type
🗋	Resolution 58-2017 Wawa/TD Bank Plat	5/12/2017	Resolution add to Y drive
🗋	Boundary Survey	5/12/2017	Backup Material
🗋	Wawa/TD Bank Plat	5/12/2017	Backup Material
🗋	Site/Landscape Plan	5/15/2017	Backup Material

BEFORE THE CITY COMMISSION
CITY OF STUART, FLORIDA

RESOLUTION No. 58-2017

RESOLUTION NUMBER R58-2017; A RESOLUTION OF THE CITY COMMISSION OF THE CITY OF STUART, FLORIDA TO APPROVE A PLAT TITLED "WAWA/TD BANK OF DOWNTOWN STUART", PREPARED BY ROBERT BLOOMSTER JR., A FLORIDA PROFESSIONAL SURVEYOR AND MAPPER NO. 6018 PROVIDING FOR AN EFFECTIVE DATE; AND FOR OTHER PURPOSES. (RC)

* * * * *

NOW THEREFORE, BE IT RESOLVED BY THE CITY COMMISSION OF THE CITY OF STUART, FLORIDA that:

SECTION 1: That certain plat titled "Wawa/TD Bank of Downtown Stuart" prepared by Robert Bloomster Jr, A Florida Professional Surveyor, a copy of which was initially filed with the City Development Department on November 18, 2016, is hereby approved by the City Commission as being in compliance with the requirements for platting in Chapter 177, Florida Statues and with local laws relative thereto.

SECTION 2: This resolution shall take effect upon adoption.

Resolution No. 58-2017
Wawa/TD Bank of Downtown Stuart

Commissioner _____ offered the foregoing resolution and moved its adoption. The motion was seconded by Commissioner _____ and upon being put to a roll call vote, the vote was as follows:

	YES	NO	ABSENT
THOMAS F. CAMPENNI, MAYOR			
TROY MCDONALD, VICE MAYOR			
EULA R. CLARKE, COMMISSIONER			
KELLI GLASS LEIGHTON, COMMISSIONER			
JEFFREY KRAUSKOPF, COMMISSIONER			

ADOPTED this 22th day of May, 2017

ATTEST:

_____
CHERYL WHITE
CITY CLERK

_____
THOMAS F. CAMPENNI,
MAYOR

APPROVED AS TO FORM
AND CORRECTNESS:

_____
MICHAEL MORTELL
CITY ATTORNEY

ACCEPTANCE AND AGREEMENT

BY SIGNING THIS ACCEPTANCE AND AGREEMENT, THE UNDERSIGNED HEREBY ACCEPTS AND AGREES TO ALL OF THE TERMS AND CONDITIONS CONTAINED IN THE FOREGOING RESOLUTION 58-2017, AND ALL EXHIBITS, ATTACHMENTS AND DEVELOPMENT DOCUMENTS, INTENDING TO BE BOUND THEREBY, AND THAT SUCH ACCEPTANCE AND AGREEMENT IS DONE FREELY, KNOWINGLY, AND WITHOUT ANY RESERVATION, AND FOR THE PURPOSES EXPRESSED WITHIN THE FOREGOING ORDINANCE. IF IT IS LATER DISCOVERED THAT THE UNDERSIGNED, OR ITS SUCCESSORS OR ASSIGNS HAVE FAILED IN ANY MATERIAL WAY TO DEVELOP THIS COMMERCIAL PLANNED UNIT DEVELOPMENT ACCORDING TO THIS ORDINANCE, ITS CONDITIONS, AND THE DEVELOPMENT DOCUMENTS, THE UNDERSIGNED UNDERSTANDS AND AGREES THAT THIS ORDINANCE MAY BE AMENDED OR REPEALED BY THE CITY COMMISSION, AND THAT OTHER ADMINISTRATIVE ACTIONS AND PENALTIES MAY BE TAKEN AGAINST THE UNDERSIGNED, ITS SUCCESSORS OR ASSIGNS, BY THE CITY, INCLUDING BUT NOT LIMITED TO SANCTIONS DESCRIBED IN THIS ORDINANCE, CODE ENFORCEMENT ACTIONS, PERMIT AND LICENSING SUSPENSIONS OR REVOCATIONS, AND ANY OR ALL OTHER APPLICABLE CIVIL AND CRIMINAL ACTIONS. IN WITNESS WHEREOF THE UNDERSIGNED HAS EXECUTED THIS ACCEPTANCE AND AGREEMENT:

WITNESSES:

Print Name: _____

William H. Cooper, Vice President
Senior Real Estate Manager
TD Bank, National Association

_____ Print Name:_____

Print Name: _____ Signature:_____

_____

OWNERS ACKNOWLEDGMENT

The above Acceptance and Agreement of and Resolution 58-2017 was acknowledged

before me this _____ day of _____, 2017 by _____, the

Senior Real Estate Manager of TD Bank, National Association.

Notary Public, State of _____
My Commission Expires:
Notary Seal Personally Known OR Produced Identification

Type of ID_____

BOUNDARY/TOPOGRAPHIC SURVEY
A PORTION OF SECTION 4 AND 9, TOWNSHIP 38 SOUTH, RANGE 41 EAST MARTIN COUNTY, FLORIDA

LEGEND

- CLEAN OUT
- STEEL POST
- POWER POLE
- MANHOLE
- LIGHT POST
- C.B.S. CONCRETE BLOCK STRUCTURE
- WATER VALVE
- FIRE HYDRANT

LEGAL DESCRIPTION:

PARCEL I
START AT A 2 INCH CONCRETE FILLED CAST IRON PIPE, LOCATED IN THE SOUTHWEST CORNER OF SECTION 4, AND THE NORTHWEST CORNER OF SECTION 9, TOWNSHIP 38 SOUTH, RANGE 41 EAST, THENCE RUN SOUTH 89°24'00" EAST ALONG THE LINE COMMON TO SAID SECTIONS 4 AND 9, A DISTANCE OF 934.90 FEET TO A CONCRETE MONUMENT FOR THE POINT OF BEGINNING; THENCE RUN SOUTH 00°44'00" WEST, 137.52 FEET TO THE EASTERLY RIGHT OF WAY OF U.S. HIGHWAY NO. 1; THENCE RUN SOUTH 62°07'00" EAST, ALONG SAID RIGHT OF WAY, A DISTANCE OF 229.19 FEET TO THE NORTH LINE OF SAID SECTION 9; THENCE RUN SOUTH 89°24'00" EAST, ALONG SAID NORTH LINE OF SECTION 9, A DISTANCE OF 208.40 FEET TO THE SOUTHWEST CORNER OF HILLCREST SUBDIVISION, PLAT BOOK 5, PAGE 14, PUBLIC RECORDS OF PALM BEACH (NOW MARTIN) COUNTY; THENCE RUN NORTH 00°41'00" EAST, ALONG THE WEST LINE OF SAID SUBDIVISION, A DISTANCE OF 165 FEET; THENCE RUN NORTH 89°24'00" WEST, A DISTANCE OF 386.22 FEET; THENCE RUN SOUTH 00°44'00" WEST, A DISTANCE OF 165 FEET TO THE POINT OF BEGINNING; BEING LOCATED PARTLY IN SECTION 4 AND PARTLY IN SECTION 9, TOWNSHIP 38 SOUTH, RANGE 41 EAST, MARTIN COUNTY, FLORIDA, LESS THE WEST 35 FEET AND THE NORTH 50 FEET THEREOF.
AND
PARCEL II
COMMENCING AT A CONCRETE MONUMENT SET WHERE THE EASTERLY RIGHT OF WAY LINE OF U.S. HIGHWAY NO. 1 INTERSECTS THE NORTH LINE OF SECTION 9, TOWNSHIP 38 SOUTH, RANGE 41 EAST, SAID POINT OF COMMENCEMENT BEING 667.96 FEET EAST OF THE NORTHWEST CORNER OF SECTION 9, THENCE SOUTH 62°07' EAST ALONG SAID EASTERLY RIGHT OF WAY LINE OF U.S. HIGHWAY NO. 1, A DISTANCE OF 500 FEET TO A POINT FOR THE POINT OF BEGINNING; THENCE CONTINUE SOUTH 62°07'00" EAST ALONG SAID EASTERLY RIGHT OF WAY LINE 234.20 FEET, TO THE POINT OF INTERSECTION WITH THE NORTHERLY EXTENSION OF THE EAST LINE OF CASA TERRACE SUBDIVISION, AS APPEARS IN PLAT BOOK 1, PAGE 35, MARTIN COUNTY, FLORIDA PUBLIC RECORDS; THENCE RUN NORTH 00°44'00" EAST 335.37 FEET ALONG SAID NORTHERLY EXTENSION TO A CONCRETE MONUMENT LOCATED ON THE NORTH LINE OF SAID SECTION 9; THENCE RUN NORTH 89°24'00" WEST ALONG SAID NORTH LINE OF SECTION 9, A DISTANCE OF 209.80 FEET; THENCE RUN SOUTH 00°44'00" WEST, 229.20 FEET TO THE POINT OF BEGINNING.

SURVEYOR'S NOTES:

1. NO ATTEMPT WAS MADE BY THIS FIRM TO LOCATE UNDERGROUND UTILITIES ON/OR ADJACENT TO THIS SITE. THE APPROXIMATE LOCATION OF ALL UTILITIES SHOWN HEREON WERE TAKEN FROM AS-BUILT DRAWINGS AND/OR ON-SITE LOCATION AND SHOULD BE VERIFIED BEFORE CONSTRUCTION
2. NO ATTEMPT WAS MADE BY THIS FIRM TO LOCATE UNDERGROUND FOOTINGS OF BUILDINGS OR FENCES ON OR ADJACENT TO THIS SITE.
3. LANDS SHOWN HEREON WERE SURVEYED WITHOUT BENEFIT OF TITLE SEARCH.
4. BEARINGS SHOWN HEREON REFER TO AN ASSUMED MERIDIAN OF S.61°57'07"E. ALONG THE EASTERLY RIGHT OF WAY LINE OF SE FEDERAL HIGHWAY.
5. LEGAL DESCRIPTION FURNISHED BY CLIENT.
6. SITE AREA: 127044.72 SQUARE FEET OR 2.92 ACRES MORE OR LESS.
7. THIS SITE LIES IN FLOOD ZONE 'X' AS SCALED AND INTERPOLATED FROM FEMA MAP PANEL NO. 12085C0153-G, DATED: MARCH 16, 2015.
8. LIMITS OF JURISDICTIONAL WETLANDS, DITCHES, DRAINAGE WAYS, WATER FLOWS, AND/OR BODIES OF WATER, IF ANY, ARE NOT DETERMINED BY THIS SURVEY. CLIENT IS ADVISED TO CONTACT APPROPRIATE GOVERNING AGENCIES FOR POSSIBLE LIMITS OF JURISDICTION.
9. ADDITIONS OR DELETIONS TO SURVEY MAPS OR REPORTS BY OTHER THAN THE SIGNING PARTY OR PARTIES IS PROHIBITED WITHOUT THE WRITTEN CONSENT OF THE SIGNING PARTY OR PARTIES.
10. ELEVATIONS SHOWN HEREON ARE BASED ON NORTH AMERICAN VERTICAL DATUM OF 1988. MARTIN COUNTY BENCHMARK: TOWER 2 2010 (ELEVATION 10.79', NAVD 88)

SURVEYOR'S CERTIFICATION:

SURVEY MAP AND REPORT OR THE COPIES THEREOF ARE NOT VALID WITHOUT THE SIGNATURE AND THE ORIGINAL RAISED SEAL OF A FLORIDA LICENSED SURVEYOR AND MAPPER.

ROBERT BLOOMSTER JR.
PROFESSIONAL LAND SURVEYOR
NO. 4134 STATE OF FLORIDA

BLOOMSTER
PROFESSIONAL LAND SURVEYORS, INC.
L.B. #6018

641 NORTHEAST SPENCER STREET
JENSEN BEACH, FLORIDA 34957
PHONE 772-334-0868

SHEET 1 OF 1

DRAWN BY:	DPK
SCALE:	1" = 30'
FIELD WORK COMPLETED:	1-20-2014
FIELD BOOK:	SKETCH
JOB NO.	12501

REVISIONS

DATE:	DESCRIPTION:	BY:
11-20-15	TOPO	CDW

TD BANK NATIONAL ASSOCIATION
989 SE FEDERAL HIGHWAY
STUART, MARTIN COUNTY, FLORIDA

PLAT BOOK: _____

PAGE: _____

SHEET 1 OF 1

WAWA / TD BANK OF DOWNTOWN STUART

BEING A PORTION OF THE SOUTHWEST 1/4 OF SECTION 4, TOWNSHIP 38 SOUTH, RANGE 41 EAST, TOGETHER WITH A PORTION OF THE NORTHWEST 1/4 OF SECTION 9, TOWNSHIP 38 SOUTH, RANGE 41 EAST CITY OF STUART, MARTIN COUNTY, FLORIDA.

BLOOMSTER PROFESSIONAL LAND SURVEYORS, INC.

641 NORTHEAST SPENCER STREET
JENSEN BEACH, FLORIDA 34957
PHONE NO. (772) 334-0868 – BLOOMSTER@BLOOMSTERSURVEY.NET

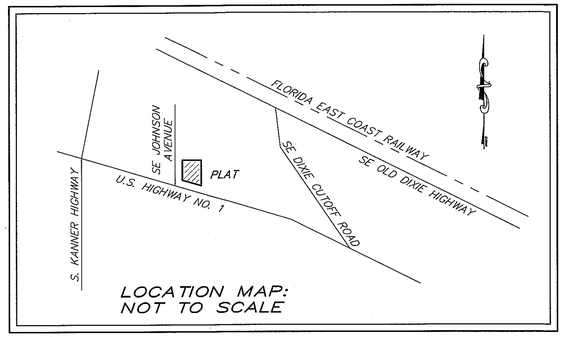

LOCATION MAP:
NOT TO SCALE

LEGAL DESCRIPTION:

A PARCEL OF LAND LYING IN THE SOUTHWEST 1/4 OF SECTION 4, TOWNSHIP 38 SOUTH, RANGE 41 EAST, TOGETHER WITH A PORTION OF THE NORTHWEST 1/4 OF SECTION 9, TOWNSHIP 38 SOUTH, RANGE 41 EAST, LYING IN THE CITY OF STUART, MARTIN COUNTY, FLORIDA.
BEING MORE PARTICULARLY DESCRIBED AS FOLLOWS:
COMMENCE AT THE SOUTHWEST CORNER OF SAID SECTION 4; THENCE SOUTH 89°24'00" EAST, ALONG THE SOUTH LINE OF SAID SOUTHWEST 1/4 OF SECTION 4, A DISTANCE OF 969.60 FEET TO THE POINT OF BEGINNING, SAID POINT BEING ON THE EAST RIGHT OF WAY LINE OF SE JOHNSON AVENUE (A PLATTED 70 FOOT RIGHT OF WAY); THENCE SOUTH 00°45'46" WEST, ALONG SAID EAST RIGHT OF WAY LINE, A DISTANCE OF 155.55 FEET TO A POINT ON THE NORTHERLY RIGHT OF WAY LINE OF U.S. HIGHWAY NO. 1 (A 100 FOOT RIGHT OF WAY); THENCE SOUTH 62°07'00" EAST, ALONG SAID NORTHERLY RIGHT OF WAY LINE, A DISTANCE OF 394.95 FEET TO A POINT THAT INTERSECTS WITH THE WEST BOUNDARY LINE OF CASA TERRACE SUBDIVISION, RECORDED IN PLAT BOOK 1, PAGE 35, MARTIN COUNTY RECORDS; THENCE NORTH 00°43'55" EAST, ALONG SAID WEST BOUNDARY LINE OF CASA TERRACE SUBDIVISION AND THE WEST BOUNDARY LINE OF HILLCREST AND LINCOLN PARK SUBDIVISION, RECORDED IN PLAT BOOK 5, PAGE 14, PALM BEACH (NOW MARTIN) RECORDS, A DISTANCE OF 452.59 FEET TO A POINT ON THE SOUTH RIGHT OF WAY LINE OF EAST FLORIDA STREET (A 50 FOOT RIGHT OF WAY); THENCE NORTH 89°33'52" WEST, ALONG SAID SOUTH RIGHT OF WAY LINE, A DISTANCE OF 351.28 FEET TO A POINT ON SAID EAST RIGHT OF WAY LINE OF SE JOHNSON AVENUE; THENCE SOUTH 00°45'46" WEST, ALONG SAID EAST RIGHT OF WAY LINE, A DISTANCE OF 114.99 FEET TO THE POINT OF BEGINNING.

CERTIFICATE OF OWNERSHIP AND DEDICATION:

STATE OF FLORIDA
COUNTY OF MARTIN

TD BANK, NATIONAL ASSOCIATION BY AND THROUGH ITS UNDERSIGNED OFFICER, HEREBY CERTIFIES THAT THEY ARE THE OWNERS OF THE PROPERTY DESCRIBED ON THE PLAT OF WAWA / TD BANK OF DOWNTOWN STUART AND HEREBY DEDICATES THE FOLLOWING:

1. TRACTS 'A' AND 'B' AS SHOWN ON THIS PLAT HEREON IS HEREBY DEDICATED TO THE FLORIDA DEPARTMENT OF TRANSPORTION FOR ROAD PURPOSES.
2. TRACT 'C' AS SHOWN ON THIS PLAT IS HEREBY DEDICATED TO THE CITY OF STUART, FLORIDA, A MUNICIPAL CORPORATION FOR ROAD PURPOSES.
3. THE CROSS ACCESS EASEMENT AS SHOWN ON THIS PLAT IS HEREBY DEDICATED TO THE OWNERS OF LOTS 1 AND 2 FOR THE PURPOSE OF VEHICULAR INGRESS AND EGRESS TO AND FROM U.S. HIGHWAY NO. 1, SE JOHNSON AVENUE AND EAST FLORIDA STREET.
4. A 10 FOOT UTILITY EASEMENT SHOWN ON THIS PLAT IS HEREBY DEDICATED TO THE OWNERS OF LOTS 1 AND 2 FOR THE PURPOSE OF CONSTRUCTION AND MAINTENANCE OF A FORCEMAIN PIPE.
5. A 15 FOOT UTILITY EASEMENT SHOWN ON THIS PLAT IS HEREBY DEDICATED TO THE CITY OF STUART, A MUNICIPAL CORPORATION FOR THE CONSTRUCTION AND MAINTENANCE OF A WATER MAIN.
6. THE 10 FOOT DRAINAGE EASEMENT AS SHOWN ON THIS PLAT IS HEREBY DEDICATED FOR DRAINAGE PURPOSES.

SIGNED AND SEALED THIS _____ DAY OF _____, 2017 ON BEHALF OF SAID CORPORATION BY ITS PRESIDENT.

TD BANK, NATIONAL ASSOCIATION

BY: _____
NAME, POSITION

WITNESSED:

BY: _____
(PRINT NAME AND TITLE)

_____
(SIGNATURE AND DATE)

BY: _____
(PRINT NAME AND TITLE)

_____
(SIGNATURE AND DATE)

ACKNOWLEDGMENT:

STATE OF FLORIDA
COUNTY OF MARTIN

THE FOREGOING INSTRUMENT WAS ACKNOWLEDGED BEFORE ME THIS ____ DAY OF _____ 2017, BY _____ _____ (POSITION) OF TD BANK, NATIONAL ASSOCIATION, ON BEHALF OF THE CORPORATION HE/SHE ( ) IS PERSONALLY KNOWN TO ME OR ( ) HAS PRODUCED _____ AS IDENTIFICATION. WITNESS MY HAND AND OFFICIAL SEAL IN THE COUNTY AND STATE LAST AFORESAID THIS _____ DAY OF _____ ,2017.

(NOTARY SEAL)

_____
NOTARY PUBLIC

PRINTED NAME _____

MY COMMISSION EXPIRES: _____

TITLE CERTIFICATION:

I, _____, AN ATTORNEY DULY LICENSED IN THE STATE OF FLORIDA, DO HEREBY CERTIFY THAT AS OF _____, 2017.

1. I HAVE EXAMINED THE TITLE OF THE HEREON DESCRIBED PROPERTY AND THAT I FIND THE PROPERTY VESTED IN TD BANK, NATIONAL ASSOCIATION.
2. ALL TAXES ON THE PROPERTY ARE PAID TO DATE
3. THERE ARE NO RECORDED MORTGAGES, ENCUMBERING THE LAND DESCRIBED HEREON.

DATED THIS _____ DAY OF _____, 2017.

BY: _____

SURVEYOR'S NOTES:

1. THIS PLAT, AS RECORDED IN ITS GRAPHIC FORM, IS THE OFFICIAL DEPICTION OF THE SUBDIVIDED LANDS DESCRIBED HEREIN AND WILL IN NO CIRCUMSTANCES BE SUPPLANTED IN AUTHORITY BY ANY OTHER GRAPHIC OR DIGITAL FORM OF PLAT.
2. THERE MAY BY ADDITIONAL RESTRICTIONS THAT ARE NOT RECORDED ON THIS PLAT THAT MAY BE FOUND IN THE PUBLIC RECORDS OF THIS COUNTY.
3. THERE SHALL BE NO BUILDING OR ANY OTHER KIND OF CONSTRUCTION, OR PLACEMENT OF TREES OR SHRUBS UTILITY AND DRAINAGE EASEMENTS.
4. BEARINGS SHOWN HEREON ARE REFERENCED TO THE NORTHEASTERLY RIGHT OF WAY LINE OF U.S. HIGHWAY NO. 1. SAID LINE BEARS SOUTH 62°07'00" EAST.
5. PLAT CONTAINS 127044.72 SQUARE FEET OR 2.92 ACRES MORE OR LESS.
6. PLAT CONTAINS 2 LOTS.
7. PER CHAPTER 177, FLORIDA STATUTES, ALL PLATTED UTILITY EASEMENTS SHALL PROVIDE THAT SUCH EASEMENTS SHALL ALSO BE EASEMENTS FOR THE CONSTRUCTION, INSTALLATION, MAINTENANCE, AND OPERATION OF CABLE TELEVISION SERVICES; PROVIDED, HOWEVER, NO SUCH CONSTRUCTION, INSTALLATION, MAINTENANCE, AND OPERATION OF CABLE TELEVISION SERVICES SHALL INTERFERE WITH THE FACILITIES AND SERVICES OF AN ELECTRIC, TELEPHONE, GAS OR OTHER PUBLIC UTILITY. IN THE EVENT A CABLE TELEVISION COMPANY DAMAGES THE FACILITIES OF A PUBLIC UTILITIES, IT SHALL BE SOLELY RESPONSIBLE FOR THE DAMAGES. THIS SECTION SHALL NOT APPLY TO THOSE PRIVATE EASEMENTS GRANTED TO OR OBTAINED BY A PARTICULAR ELECTRIC, TELEPHONE, GAS OR OTHER PUBLIC UTILITY. SUCH CONSTRUCTION, INSTALLATION, MAINTENANCE, AND OPERATION SHALL COMPLY WITH THE NATIONAL ELECTRICAL SAFETY CODE AS ADOPTED BY THE FLORIDA PUBLIC SERVICE COMMISSION.

LOT TABULATIONS
LOT 1 = 89582.19 SQUARE FEET, 2.06 ACRES ±
LOT 2 = 34070.69 SQUARE FEET, 0.78 ACRES ±

GRAPHIC SCALE
60 0 30 60 120
(IN FEET)
1 inch = 60 ft.

SURVEYOR'S CERTIFICATE:

I, ROBERT BLOOMSTER JR., HEREBY CERTIFY THAT THIS PLAT OF WAWA / TD BANK OF DOWNTOWN STUART IS A TRUE AND CORRECT REPRESENTATION OF THE LANDS SURVEYED, THAT SUCH SURVEY WAS MADE UNDER MY RESPONSIBLE DIRECTION AND SUPERVISION; THAT SAID SURVEY IS ACCURATE TO THE BEST OF MY KNOWLEDGE AND BELIEF; THAT PERMANENT REFERENCE MONUMENTS HAVE BEEN PLACED, AS REQUIRED BY LAW, AND THAT LOT CORNERS WILL BE SET FOR THE REQUIRED IMPROVEMENTS WITHIN THE PLATTED LANDS; AND, FURTHER THAT THE PLAT DATA COMPLIES WITH ALL THE REQUIREMENTS OF CHAPTER 177, PART 1, FLORIDA STATUTES, AND APPLICABLE ORDINANCES OF CITY OF STUART, FLORIDA.

DATED THIS _____ DAY OF _____, 2017.

_____
ROBERT BLOOMSTER JR.
PROFESSIONAL LAND SURVEYOR
FLORIDA REGISTRATION NO. 4134
LICENSED BUSINESS #6018

CLERK'S RECORDING CERTIFICATE:

I, CAROLYN TIMMANN, CLERK OF THE CIRCUIT COURT OF MARTIN COUNTY, FLORIDA, HEREBY CERTIFY THAT THIS PLAT WAS FILED FOR RECORD IN PLAT BOOK _____, PAGE _____, MARTIN COUNTY, FLORIDA, PUBLIC RECORDS, THIS _____ DAY OF _____, 2017.

CAROLYN TIMMANN, CLERK OF THE CIRCUIT COURT
MARTIN COUNTY, FLORIDA

BY: _____
DEPUTY CLERK

_____
PARCEL CONTROL NUMBER

CITY APPROVAL:

STATE OF FLORIDA
COUNTY OF MARTIN

THIS PLAT IS HEREBY APPROVED BY THE UNDERSIGNED ON THE DATE INDICATED:

DATE: _____ _____
THOMAS F. CAMPENNI – MAYOR

DATE: _____ _____
CHERIE WHITE – CITY CLERK

DATE: _____ _____
MICHAEL J. MORTELL – CITY ATTORNEY

DATE: _____ _____
JOE W. CAPRA – CITY ENGINEER

DATE: _____ _____
GREGORY S. FLEMING, PSM – CITY PLAT REVIEWER

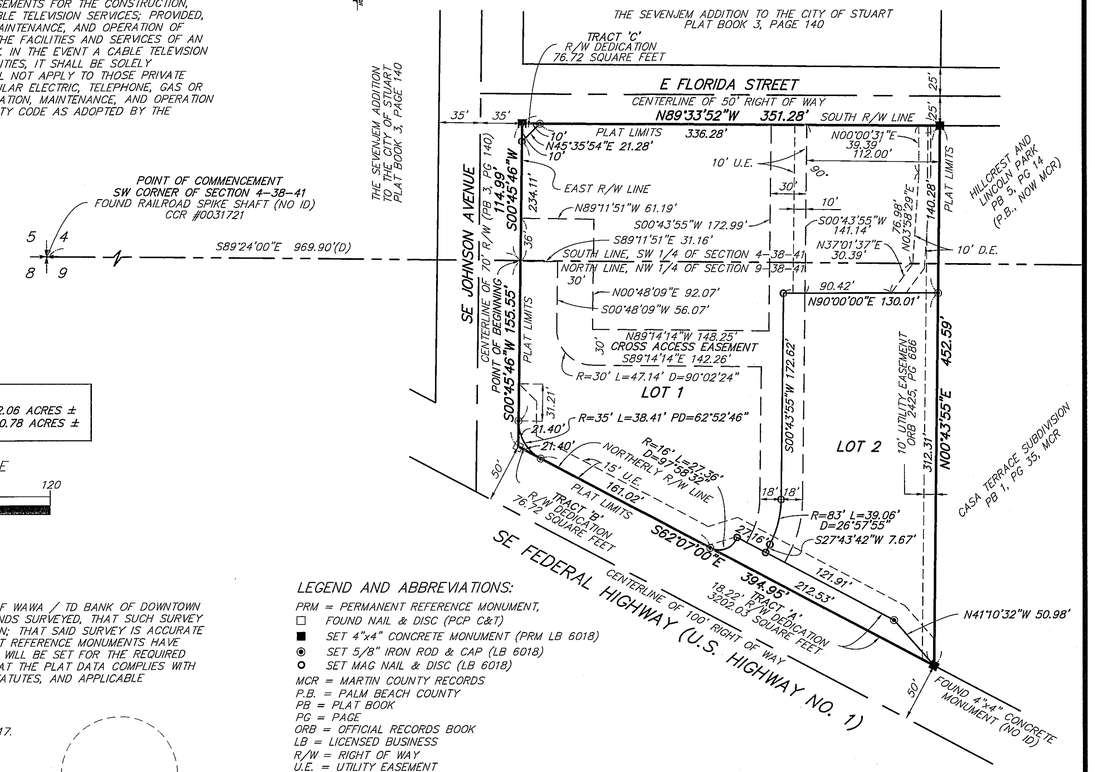

LEGEND AND ABBREVIATIONS:

PRM = PERMANENT REFERENCE MONUMENT,
□ FOUND NAIL & DISC (PCP C&T)
■ SET 4"x4" CONCRETE MONUMENT (PRM LB 6018)
◉ SET 5/8" IRON ROD & CAP (LB 6018)
○ SET MAG NAIL & DISC (LB 6018)
MCR = MARTIN COUNTY RECORDS
P.B. = PALM BEACH COUNTY
PB = PLAT BOOK
PG = PAGE
ORB = OFFICIAL RECORDS BOOK
LB = LICENSED BUSINESS
R/W = RIGHT OF WAY
U.E. = UTILITY EASEMENT
D.E. = DRAINAGE EASEMENT
R = RADIUS
D = DELTA OR CENTRAL ANGLE
L = ARC LENGTH
ID = IDENTIFICATION
(C) = CALCULATED

LANDUSE MAP NTS

ALL INVASIVE EXOTIC PLANT MATERIAL SHALL BE REMOVED THROUGHOUT SITE

SEE SHEET L-03 FOR PLANTING DETAILS/NOTES & CODE COMPLIANCE CHART; SEE SHEET L-01 FOR EXISTING, TRANSPLANTED, & REMOVED PLANT MATERIALS

ALL LANDSCAPE AREAS TO BE FULLY COVERED BY AUTOMATIC IRRIGATION SYSTEM WITH 100% COVERAGE & 50% OVERLAP. A RAIN SENSOR SHALL BE PROVIDED

VICINITY MAP NTS

PLANT SCHEDULE

TREES	QTY	COMMON NAME	BOTANICAL NAME	SPECIFICATIONS	CAL/DBH	HEIGHT	SPREAD	NATIVE	XERIC	REMARKS
IC	7	Dahoon Holly	Ilex cassine	B & B	2.5"Cal	12` Ht	6`	Yes	High	
MG	4	Magnolia "Blanchard"	Magnolia grandiflora	B & B	2.5"Cal	12-14`	6`	Yes	High	6` CT
PB	6	Redbay	Persea borbonia	B & B	2"Cal	12-14` ht.	6`	Yes	High	
QV	10	Southern Live Oak	Quercus virginiana	B & B	2.5"Cal	12` Ht	6`	Yes	High	4` CT
TD	26	Bald Cypress	Taxodium distichum	B & B	2.5"Cal	12-14`	6`	Yes	High	4` CT
ACCENT TREES	QTY	COMMON NAME	BOTANICAL NAME	SPECIFICATIONS	CAL/DBH	HEIGHT	SPREAD	NATIVE	XERIC	REMARKS
CW	13	Anacahuita	Cordia boissieri `White Geiger`	25 gal	2"Cal	10` Ht	5`	Yes	High	4` CT
CW2	5	Anacahuita	Cordia boissieri `White Geiger`	25 gal	2"Cal	10` Ht	5`	Yes	High	4` CT; Counted @ (2:1)
GL	2	Loblolly Bay	Gordonia lasianthus	25 gal	2"Cal	10` Ht	4-5`	Yes	High	
LJ	16	Glossy Privet	Ligustrum lucidum	25 gal	2"Cal	10` Ht	6`	No	High	3` CT
LJ2	7	Glossy Privet	Ligustrum lucidum	25 gal	2"Cal	10` Ht	6`	No	High	3` CT; Counted @ (2:1)
MR	15	Wax Myrtle	Myrica cerifera	25 gal	2"Cal	10` Ht	4-5`	Yes	High	
FLOWERING TREES	QTY	COMMON NAME	BOTANICAL NAME	SPECIFICATIONS	CAL/DBH	HEIGHT	SPREAD	NATIVE	XERIC	REMARKS
CC	11	Cassia	Cassia surattensis	25 gal	2"Cal	10` Ht	4-5`	No	High	4` CT
CC2	10	Cassia	Cassia surattensis	25 gal	2"Cal	10` Ht	4-5`	No	High	4` CT; Counted @ (2:1)
MITIGATION TREES	QTY	COMMON NAME	BOTANICAL NAME	SPECIFICATIONS	CAL/DBH	HEIGHT	SPREAD	NATIVE	XERIC	REMARKS
ICM	22	Dahoon Holly	Ilex cassine	B & B	4.5"Cal	16-18` oa	6-7`	Yes	High	
PALM TREES	QTY	COMMON NAME	BOTANICAL NAME	SPECIFICATIONS	CAL/DBH	HEIGHT	SPREAD	NATIVE	XERIC	REMARKS
AW	2	Paurotis Palm	Acoelorrhaphe wrightii	B & B		12` Ht	8-10`	Yes	High	7 Stems Min., 3-5` CT
BRR	1	Pony Tail Palm	Beaucarnea recurvata	NA				Yes	High	RELOCATED
PE	23	Solitaire Palm	Ptychosperma elegans	B & B		14`gw		No	Medium	
SP	19	Cabbage Palmetto	Sabal palmetto	B & B		14`-18`ct		Yes	High	stagger hts, slick trunks
SPR	1	Cabbage Palmetto	Sabal palmetto	NA				Yes	High	RELOCATED
SHRUBS	QTY	COMMON NAME	BOTANICAL NAME	SPECIFICATIONS	SPACING	HEIGHT	SPREAD	NATIVE	XERIC	REMARKS
CHH	180	Red Tip Cocoplum	Chrysobalanus icaco `Red Tip`	NA	30"	30"	24"	Yes	High	Full to base
CSH	299	Silver Button Wood	Conocarpus erectus sericeus	NA	24"	24"	18-24"	Yes	High	
MYS	263	Compact Simpson`s Stopper	Myrcianthes fragrans `compacta`	NA	30"	24"	24"	Yes	High	full to base;
POD	38	Shrubby Yew	Podocarpus macrophyllus maki	NA	24"	24"	24"	No	Medium	
SHRUB AREAS	QTY	COMMON NAME	BOTANICAL NAME	SPECIFICATIONS	SPACING	HEIGHT	SPREAD	NATIVE	XERIC	REMARKS
BOG	86	`Raspberry ice`	Bougainvillea glabra `variegated`	n/a	24"	18"	18"	No	High	Full to base;
DUR	602	Sky Flower	Duranta repens `Dwarf Golden`	n/a	18"	16-18"	16-18"	Yes	High	
HAC	556	Dwarf Scarlet Bush	Hamelia patens `Compacta`	n/a	24"	18-24"	18-24"	Yes	High	Full to base
HYL	23	Spider Lily	Hymenocallis latifolia	n/a	24"	18"	18"	Yes	High	Full to base
ILX	55	Dwarf Schillings Holly	Ilex vomitoria `Schillings Dwarf`	n/a	18"	16-18"	16-18"	Yes	High	
JAS	178	Southern Wax Jasmine	Jasminum simplicifolium	3 gal	24"	20"	18"	No	Medium	
MUH	516	Pink Muhly Grass	Muhlenbergia capillaris	n/a	18"	14-16"	14-16"	Yes	High	Full to base
NEB	957	Boston Fern	Nephrolepis exaltata	3 gal	24"	18"	18"	Yes	High	
TRI	79	Fakahatchee Grass	Tripsacum dactyloides	n/a	36"	30-36"	24-30"	Yes	High	
VBO	64	Walter`s Viburnum	Viburnum obovatum	n/a	24"	20"	18"	No	Medium	
ZP	68	Coontie	Zamia pumila	n/a	24"	18-24"	18-24"	Yes	High	
GROUND COVERS	QTY	COMMON NAME	BOTANICAL NAME	SPECIFICATIONS	SPACING	HEIGHT	SPREAD	NATIVE	XERIC	REMARKS
HED	16	Cucumberleaf Sunflower	Helianthus debilis	n/a	16"	12-14"	8-10"	Yes	High	
HLA	70	Spider Lily	Hymenocallis latifolia	n/a	18"	12-14"	12-14"	Yes	High	
JCA	401	Blue Pacific Juniper	Juniperus conferta `Blue Pacific`	n/a	16"	14-16"	18"	No	Medium	
SOD/SEED	QTY	COMMON NAME	BOTANICAL NAME	SPECIFICATIONS	SPACING	HEIGHT	SPREAD	NATIVE	XERIC	REMARKS
BAH	4,076 sf	Bahia Grass	Paspalum notatum `Argentine`	grass					High	seed

THOMAS ENGINEERING GROUP
CIVIL ENGINEERS - PROJECT MANAGERS - LAND PLANNING - LANDSCAPE ARCHITECTS
1000 CORPORATE DR. SUITE 250 FT. LAUDERDALE, FL 33334 P: 954-202-7000
4950 W. KENNEDY BLVD. SUITE 600 TAMPA, FL 33609 P: 813-379-4100
125 W INDIANTOWN RD. SUITE 206 JUPITER, FL 33458 P: 561-203-7503

THE INFORMATION, DESIGN AND CONTENT OF THIS PLAN ARE PROPRIETARY AND SHALL NOT BE COPIED OR USED FOR ANY PURPOSE WITHOUT PRIOR WRITTEN AUTHORIZATION FROM THOMAS ENGINEERING GROUP, LLC. ONLY APPROVED, SIGNED AND SEALED PLANS SHALL BE UTILIZED FOR CONSTRUCTION PURPOSES. © 2014 THOMAS ENGINEERING GROUP, LLC.

REVISIONS:

REV:	DATE:	COMMENT:	BY:
.	.	.	.
.	.	.	.
.	.	.	.
.	.	.	.
.	.	.	.
.	.	.	.
.	.	.	.
.	.	.	.
.	.	.	.
.	.	.	.
.	.	.	.

811 KNOW WHAT'S BELOW ALWAYS CALL 811 BEFORE YOU DIG
It's fast. It's free. It's the law.
www.callsunshine.com

PROJECT No.: -
DRAWN BY: RJK
CHECKED BY: MDG
CAD I.D.: 16-0004 LANDSCAPE PLAN

PROJECT:

PROPOSED WAWA AND TD BANK DOWNTOWN STUART

FOR

LG INVESTMENTS, LLC

CITY OF STUART
MARTIN COUNTY, FLORIDA

THOMAS ENGINEERING GROUP
RADICE III
1000 CORPORATE DRIVE, SUITE 250
FORT LAUDERDALE, FL 33334
PH: (954) 202-7000
FX: (954) 202-7070
www.ThomasEngineeringGroup.com

MICHAEL D. GROSSWIRTH
REGISTERED LANDSCAPE ARCHITECT
November 17, 2016
FLORIDA LICENSE No. 6666871
FLORIDA BUSINESS CERT. OF AUTH. No. 27528

SHEET TITLE:

LANDSCAPE PLAN

SHEET NUMBER:

L-02

Printed on Thursday, November 17, 2016, 12:00 PM by Michael Grosswirth

CITY OF STUART, FLORIDA
AGENDA ITEM REQUEST
CITY COMMISSION

Meeting Date:5/22/2017 **Prepared by:**Ryanne Cavo

Title of Item:

RESOLUTION No. 60-2017; A RESOLUTION OF THE CITY COMMISSION OF THE CITY OF STUART, FLORIDA TO PRESENT DEED FROM THE CITY OF STUART TO HABITAT FOR HUMANITY OF MARTIN COUNTY, INC. FOR THE REAL PROPERTY LOCATED AT 917 S.E. BAYOU AVENUE, STUART, FLORIDA; AND PROVIDING AN EFFECTIVE DATE AND FOR OTHER MATTERS. (RC)

Summary Explanation/Background Information on Agenda Request:

Issue Quit Claim Deed from City of Stuart to Habitat for Humanity (917 SE Bayou Ave)

Funding Source:

N/A

Recommended Action:

Accept the Resolution

ATTACHMENTS:

	Description	Upload Date	Type
🗋	Resolution 60-2017	5/17/2017	Resolution add to Y drive
🗋	Exhibit A (Quit Claim Deed)	5/17/2017	Exhibit

CITY OF STUART, FLORIDA

RESOLUTION NUMBER 60-2017

A RESOLUTION OF THE CITY COMMISSION OF THE CITY OF STUART, FLORIDA TO PRESENT DEED FROM THE CITY OF STUART TO HABITAT FOR HUMANITY OF MARTIN COUNTY, INC. FOR THE REAL PROPERTY LOCATED AT 917 S.E. BAYOU AVENUE, STUART, FLORIDA; AND PROVIDING AN EFFECTIVE DATE AND FOR OTHER MATTERS.

* * * * *

BE IT RESOLVED BY THE CITY COMMISSION OF THE CITY OF STUART, FLORIDA that:

SECTION 1: The City Commission hereby presents this quit claim deed to Habitat for Humanity of Martin County, Inc., conveying the real property located at 917 SE Bayou Avenue, Stuart, Florida, as further described as Exhibit "A."

SECTION 2: The closing shall take place on or before June 30, 2017.

SECTION 3: This resolution shall take effect immediately upon adoption.

Commissioner _____ offered the foregoing resolution and moved its adoption. The motion was seconded by Commissioner _____ and upon being put to a roll call vote, the vote was as follows:

	YES	NO	ABSENT
TOM CAMPENNI, MAYOR			
TROY A. McDONALD, VICE MAYOR			
KELLI GLASS LEIGHTON, COMMISSIONER			
JEFFREY A. KRAUSKOPF, COMMISSIONER			
EULA R. CLARKE, COMMISSIONER			

ADOPTED this _____ day of May, 2017.

ATTEST:

_____
CHERYL WHITE
CITY CLERK

_____
TOM CAMPENNI
MAYOR

REVIEWED FOR FORM AND
CORRECTNESS:

_____
MICHAEL J. MORTELL
CITY ATTORNEY

This instrument prepared by:
Michael J. Mortell, Esq.
121 SW Flagler Avenue
Stuart, Florida 34994

QUIT CLAIM DEED

THIS QUIT CLAIM DEED is made, executed and entered into this ____ day of June, 2017 by and between **CITY OF STUART, a municipal corporation of the State of Florida**, whose post office address is: 121 S.W. Flagler Avenue, Stuart, Florida 34994 ("Grantor"), and **HABITAT FOR HUMANITY OF MARTIN COUNTY, INC., a Florida Non-Profit Corporation,** whose post office address is: 2555 S.E. Bonita Street, Stuart, Florida 34997 ("Grantee").

W I T N E S S E T H :

That said Grantor, for and in consideration for the sum of TEN DOLLARS ($10.00), and other good and valuable considerations in hand paid by said Grantee, the receipt of which is hereby acknowledged, has remised, released and quit claimed, and by these presents does remise, release and quit claim unto said Grantee, all the rights, titles and interests, claim and demand which said Grantor have in and to the following described land, situate, lying and being in Martin County, Florida to wit:

Lot 5, Block 6, Boggan's Sub-division, according to the map or plat thereof, as recorded in Plat Book 5, Page(s) 57, of the Public Records of Palm Beach County (now Martin County), Florida

PARCEL I.D. NO.: 4-38-41-001-006-00050.10000

TO HAVE AND TO HOLD the same, together with all and singular the appurtenances thereunto belonging or in any wise appertaining, and all the estate, right, title interest and claim whatsoever of said Grantor, either in law or equity, to the only proper use, benefit and behoof of the said Grantee.

IN WITNESS WHEREOF, the said party of the Grantor have hereunto set his hand and signed and sealed these presents the day and year first above written.

_____
Print Witness Name:_____

CITY OF STUART, a municipal corporation of the State of Florida,

_____
Print Witness Name:_____

_____
By:_____
Its:_____

STATE OF FLORIDA)
) ss.:
COUNTY OF MARTIN)

The foregoing instrument was acknowledged before me this _____ day of June, 2017 by:_____ for **CITY OF STUART, a municipal corporation of the State of Florida,** its_____ who ☐ is personally known by me or ☐ has produced as identification his/her _____.

(Seal)

_____
NOTARY PUBLIC, State of Florida
My Commission Expires:_____

CITY OF STUART, FLORIDA
AGENDA ITEM REQUEST
CITY COMMISSION

Meeting Date:5/22/2017 **Prepared by:**Ryanne Cavo

Title of Item:
RESOLUTION No. 61-2017; A RESOLUTION OF THE CITY COMMISSION OF THE CITY OF STUART, FLORIDA TO PRESENT DEED FROM THE CITY OF STUART TO HABITAT FOR HUMANITY OF MARTIN COUNTY, INC. FOR THE REAL PROPERTY LOCATED AT 924 S.E. BAHAMA AVENUE, STUART, FLORIDA; AND PROVIDING AN FFECTIVE DATE AND FOR OTHER MATTERS. (RC)

Summary Explanation/Background Information on Agenda Request:
Quit Claim Deed from City of Stuart to Habitat for Humanity (924 SE Bahama Ave)

Funding Source:
N/A

Recommended Action:
Accept the Resolution

ATTACHMENTS:

	Description	Upload Date	Type
🗋	Resolution 61-2017	5/17/2017	Resolution add to Y drive
🗋	Exhibit A (Quit Claim Deed)	5/17/2017	Exhibit

CITY OF STUART, FLORIDA

RESOLUTION NUMBER 61-2017

A RESOLUTION OF THE CITY COMMISSION OF THE CITY OF STUART, FLORIDA TO PRESENT DEED FROM THE CITY OF STUART TO HABITAT FOR HUMANITY OF MARTIN COUNTY, INC. FOR THE REAL PROPERTY LOCATED AT 924 S.E. BAHAMA AVENUE, STUART, FLORIDA; AND PROVIDING AN EFFECTIVE DATE AND FOR OTHER MATTERS.

* * * * *

BE IT RESOLVED BY THE CITY COMMISSION OF THE CITY OF STUART, FLORIDA that:

SECTION 1: The City Commission hereby presents this quit claim deed to Habitat for Humanity of Martin County, Inc., conveying the real property located at 924 SE Bahama Avenue, Stuart, Florida, as further described as Exhibit "A."

SECTION 2: The closing shall take place on or before June 30, 2017.

SECTION 3: This resolution shall take effect immediately upon adoption.

Commissioner _____ offered the foregoing resolution and moved its adoption. The motion was seconded by Commissioner _____ and upon being put to a roll call vote, the vote was as follows:

	YES	NO	ABSENT
TOM CAMPENNI, MAYOR			
TROY A. McDONALD, VICE MAYOR			
KELLI GLASS LEIGHTON, COMMISSIONER			
JEFFREY A. KRAUSKOPF, COMMISSIONER			
EULA R. CLARKE, COMMISSIONER			

ADOPTED this _____ day of May, 2017.

ATTEST:

_____
CHERYL WHITE
CITY CLERK

_____
TOM CAMPENNI
MAYOR

REVIEWED FOR FORM AND
CORRECTNESS:

_____
MICHAEL J. MORTELL
CITY ATTORNEY

This instrument prepared by:
Michael J. Mortell, Esq.
121 SW Flagler Avenue
Stuart, Florida 34994

QUIT CLAIM DEED

THIS QUIT CLAIM DEED is made, executed and entered into this ____ day of June, 2017 by and between **CITY OF STUART, a municipal corporation of the State of Florida**, whose post office address is: 121 S.W. Flagler Avenue, Stuart, Florida 34994 ("Grantor"), and **HABITAT FOR HUMANITY OF MARTIN COUNTY, INC., a Florida Non-Profit Corporation,** whose post office address is: 2555 S.E. Bonita Street, Stuart, Florida 34997 ("Grantee").

W I T N E S S E T H :

That said Grantor, for and in consideration for the sum of TEN DOLLARS ($10.00), and other good and valuable considerations in hand paid by said Grantee, the receipt of which is hereby acknowledged, has remised, released and quit claimed, and by these presents does remise, release and quit claim unto said Grantee, all the rights, titles and interests, claim and demand which said Grantor have in and to the following described land, situate, lying and being in Martin County, Florida to wit:

LOT 7, BLOCK 1, D.W.C. RUFF'S LITTLE DIXIE ADDITION, according to the map or plat thereof, as recorded in Plat Book 9, Page(s) 65, of the Public Records of Palm Beach (now Martin) County, Florida

PARCEL I.D. NO.: 4-38-41-016-001-00070.10000

TO HAVE AND TO HOLD the same, together with all and singular the appurtenances thereunto belonging or in any wise appertaining, and all the estate, right, title interest and claim whatsoever of said Grantor, either in law or equity, to the only proper use, benefit and behoof of the said Grantee.

IN WITNESS WHEREOF, the said party of the Grantor have hereunto set his hand and signed and sealed these presents the day and year first above written.

_____
Print Witness Name:_____

CITY OF STUART, a municipal corporation of the State of Florida,

_____
Print Witness Name:_____

_____
By:_____
Its:_____

STATE OF FLORIDA)
) ss.:
COUNTY OF MARTIN)

The foregoing instrument was acknowledged before me this _____ day of June, 2017 by:_____ for **CITY OF STUART, a municipal corporation of the State of Florida,** its_____ who ☐ is personally known by me or ☐ has produced as identification his/her _____.

(Seal)

_____
NOTARY PUBLIC, State of Florida
My Commission Expires:_____

CITY OF STUART, FLORIDA
AGENDA ITEM REQUEST
CITY COMMISSION

Meeting Date: 5/22/2017 **Prepared by:** Teresa Lamar-Sarno, AICP

Title of Item:

REQUEST APPROAVAL TO ENGAGE THE SERVICE OF COLING BAENZINGER & ASSOCIATES AS PROFESSIONAL CONSULTANT FOR EXECUTIVE RECRUITMENT SERVICE FOR THE CITY MANAGER POSITION. (RC)

Summary Explanation/Background Information on Agenda Request:

The City Commission has asked for the retainer of an executive search firm, Colin Baenzinger & Associates to assist with the application process and hiring of a new City Manager. Colin Baenzinger & Associates has prepared a proposal to perform an executive search for a fixed fee of $24,500.

Funding Source:

City Commission $24,500 with a transfer from CM Contingency Fund

Recommended Action:

Adopt a motion approving the engagement of Colin Baenzinger & Associates, in the amount of $24,500 to be paid from the City Commission budget.

ATTACHMENTS:

	Description	Upload Date	Type
🗋	Colin Baenzinger Proposal	5/17/2017	Backup Material
🗋	appendices	5/17/2017	Backup Material

COLIN BAENZIGER & ASSOCIATES

EXECUTIVE RECRUITING

PROPOSAL TO PROVIDE EXECUTIVE SEARCH SERVICES FOR CITY MANAGER FOR STUART, FL

Colin Baenziger & Associates

Project Manager and Contact Person:

Colin Baenziger (561) 707-3537
Colin Baenziger & Associates
2055 South Atlantic Avenue • Suite 504
Daytona Beach Shores, FL 32118
e-mail: ***Colin@cb-asso.com***
Fax: (888) 635-2430

…Serving Our Clients with a Personal Touch…

COLIN BAENZIGER & ASSOCIATES

EXECUTIVE RECRUITING

May 8, 2017

The Honorable Mayor Tom Campenni, Vice Mayor Troy McDonald, and Commissioners Jeff Krauskopf, Eula Clarke, and Kelli Glass-Leighton
Attention: Lenora Darden, Procurement Manager
City of Stuart, FL
121 SW Flagler Avenue
Stuart, FL 34994

Dear Mayor Campenni, Vice Mayor McDonald, and Commissioners Krauskopf, Clarke, and Glass-Leighton:

Colin Baenziger & Associates (CB&A) would like to take this opportunity to submit a proposal to assist in finding your next City Manager. While selecting key personnel is never easy, CB&A has developed a problem-free process that has been tested nationwide and found to be extremely effective.

While CB&A is a municipal recruiting firm which has conducted assignments across the country, our home base is Florida. In fact, we have been selected to perform 99 of the last 142 recruitments where a Florida city or county has chosen to use a recruiter to find its City or County Manager / Administrator. We pride ourselves on providing not just high-quality results, but, equally important, providing a great deal of personal attention to each of our local government clients. To conduct a proper recruitment, we feel the project manager must do more than just drop by occasionally. He/she must get to know the appropriate government officials and the community firsthand. That effort takes time, but it is the only way to ensure the candidates we recommend are well qualified and a good fit for your community. As a result, we only take a few clients at a time and focus on getting the job done properly. Further, we routinely complete our work in sixty to ninety days. This timeframe includes preparation of recruitment and advertising materials, candidate outreach, candidate screening, finalist interviewing, and manager selection. We also offer the best warranty in the industry.

Not only do we offer unparalleled service at a reasonable price, we focus on finding just the right people for your organization. We say people, and not person, because our goal is to bring you five finalists who are so good that you will have a difficult time choosing among them. The proof is in the fact that six of our local government clients have passed resolutions thanking us for our outstanding efforts in finding their key staff. We do not know how often you have passed a resolution thanking a consulting firm for its efforts, but we have rarely seen it happen. Our goal, in fact, would be for you to be our next client to pass such a resolution.

Some of our Florida searches include City Managers for Cooper City, Dania Beach, Destin, Fort Myers, Gainesville, Hallandale Beach, Key Biscayne, Madeira Beach, Melbourne, Miramar, Mount Dora, Palm Beach Gardens, Palm Coast, and St. Pete Beach. Nationally we have found City Managers for Ankeny, IA; Bellevue, WA; Fayetteville, NC; Portland, ME; Roanoke, VA; Scottsdale, AZ; Tacoma, WA; and Winchester, VA. We have also sought the Borough Manager for Matanuska-Susitna Borough, Alaska (a county the size of West Virginia), County Managers for Brevard County, FL; Clackamas County, OR; Clay County, FL; El Paso County, TX; James City County, VA; Polk County, IA; St. Lucie County, FL; St. Johns County, FL; and Union County, NC.

Some of our current searches include the City Managers for Burien, WA, Tacoma, WA, Auburn, AL, Doraville, GA, Parkland, FL, Roanoke, VA and Petersburg, VA, an Assistant City Manager for Petersburg, FL and Weston, FL, a Growth Management Director for Collier County, FL, a Finance Director and Police Chief for Petersburg, VA, a Police Chief for Winchester, VA, a Utilities Manager for Deerfield Beach, FL and a Utilities Director for Panama City, FL.

Those authorized to bind the company are myself, Colin Baenziger, and Lynelle Klein, Vice President for Operations.

We look forward to formally presenting our credentials and working with you in the near future. If you have any questions, please feel free to contact me at (561) 707-3537.

Sincerely,

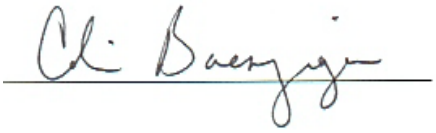

Colin Baenziger
Principal / Owner

…Serving Our Clients with a Personal Touch…

PROPOSAL TO PROVIDE
EXECUTIVE SEARCH FIRM SERVICES

TABLE OF CONTENTS

SECTION		PAGE
VOLUME I	LETTER OF TRANSMITTAL	
I.	QUALIFICATIONS AND EXPERIENCE OF THE FIRM	1
	The Firm	
	Technical Capabilities and Organizational Structure	
	Completion of Projects within Budget	
	Completion of Projects on Schedule	
	Diversity	
	Prior Names and Litigation	
	Insurance	
	Overall Executive Search Experience	
II.	PROPOSED PROJECT STAFF	17
	Project Team and Involvement	
	Resumes of Key Staff	
III.	APPROACH / METHODOLOGY	23
	Search Methodology	
	The City's Obligations	
IV.	TIMELINE	29
V.	FEE AND WARRANTY	31
VI.	REFERENCES	33
VOLUME II		
	APPENDIX A: ALL GOVERNMENTAL SEARCH ASSIGNMENTS	A-1
	APPENDIX B: SAMPLE RECRUITMENT BROCHURE	B-1
	APPENDIX C: SAMPLE CANDIDATE REPORT	C-1
	APPENDIX D: SAMPLE SURVEY	D-1
	APPENDIX E: RESOLUTION OF ST. JOHNS COUNTY, FL	E-1
	APPENDIX F: COMMENTS ON CB&A'S VETTING PROCESS	F-1

I. Qualifications and Experience of the Firm

The Firm, Its Philosophy, & Its Experience

Colin Baenziger & Associates (CB&A) is a nationally recognized executive recruiting firm established in 1997 and owned and operated by Colin Baenziger. We are a sole proprietorship headquartered in Volusia County, FL with offices in Sammamish, WA and Salt Lake City, UT. As a sole proprietorship, we are not registered with any states as a corporation, foreign or otherwise. Although our primary focus is executive search, we are often involved in operational reviews of governmental operations. Our consultants live in other areas of the country and converge wherever the client's needs exist. We develop an operational plan prior to arrival and our team of experts quickly studies the issues, identifies problems and opportunities, performs the necessary analysis, develops solutions, prepares reports and action plans, and completes the assignment. The client receives prompt, professional service, and its needs are effectively addressed. We are available for follow-up work, however, our goal is to provide the client with solutions that its existing staff can implement without additional outside assistance.

Colin Baenziger & Associates' outstanding reputation is derived from our commitment to timeliness and quality. Our work is not done until you are satisfied. That means we go the extra mile and, at times, expend more effort and energy than originally anticipated in our fee or in our action plan. We do not ask the client for additional fees. Rather, we accept these situations as part of our cost of doing business. We believe that once a contract is signed we have an obligation to fulfill its requirements excellently and within the budgeted amount.

Since beginning our search practice in 1998, we have conducted searches and other related work for clients in thirty-two states. Overall our staff has performed over 170 City, County, and Special District Manager searches and approximately 300 local government searches. The basic approach we have presented herein is the approach we have used in each of our searches. It has been refined over the years to the point where it is problem-free.

Technical Capabilities and Organizational Structure

Colin Baenziger & Associates has developed its business model over the past 19 years. The model has proven to be extremely effective in every state where we have applied it and for every type of position for which we have searched. In fact, we are often called when a government has a particularly difficult position to fill or where one of our competitors has failed. Overall, we utilize approximately eighteen people. Most staff members are independent contractors and are given assignments on a task order basis. Consequently we can pay well while having a great deal of flexibility without the overhead of many firms. In addition to Mr. Baenziger, other senior staff members are former City and/or County Managers or elected officials. As a result, we understand multiple perspectives and have been very successful in identifying the right candidates for our clients. CB&A's other staff are all competent researchers and writers and most have been with us for a long time.

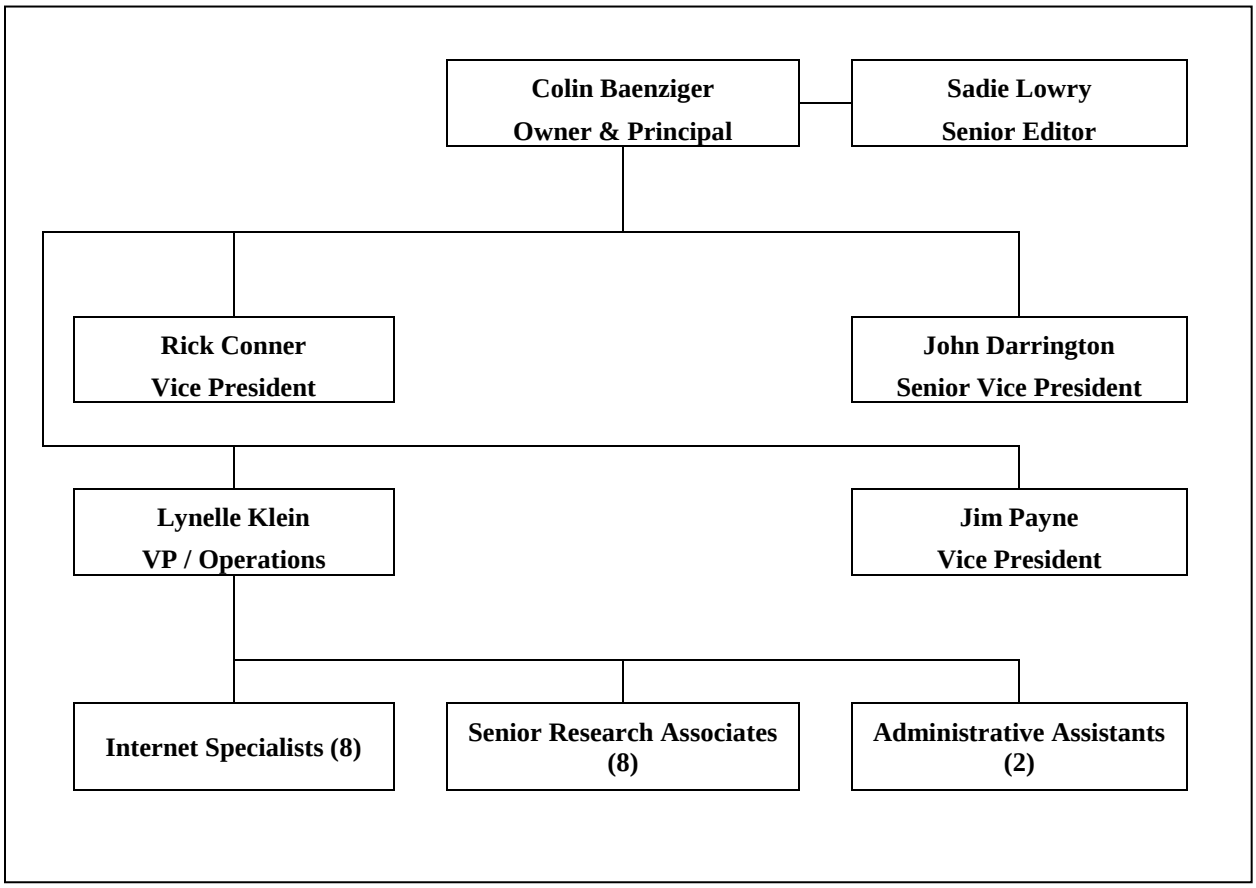

Completion of Projects within Budget

Colin Baenziger & Associates is proud of its record of completing searches within budget. When we quote a price to the client, that price is what the client will pay, no matter how difficult the search is or what unforeseen circumstances may develop. ***We have never asked a search client for additional fees, even when we were entitled to do so.***

Completion of Projects on Schedule

Colin Baenziger & Associates routinely completes its assignments in sixty to ninety days. Further, since CB&A began performing recruitments, ***it has never missed a project milestone***.

Diversity

CB&A has extensive contacts with individuals and organizations representing women and minorities. We are thus able to identify and bring a diverse group of finalists to the City. The proof is that from the beginning of 2009, 32% of our placements have been females and/or minorities with the high in any given year being 47% and the low being 13%.

Prior Names and Litigation

Colin Baenziger & Associates has always operated under its current name and has never been involved in any litigation, except to testify as an expert witness on behalf of one of the parties. Our performance has never been questioned nor have we or any of our clients been involved in any legal action as a result of our work.

Insurance

To protect our clients, Colin Baenziger & Associates maintains the following insurance coverages: (1) general liability insurance of $1 million combined single limit per occurrence for bodily injury, personal injury, and property damages, (2) automobile liability insurance of $1 million per accident, and (3) professional liability insurance of $1 million per occurrence. As a small firm, predominantly utilizing independent contractors, we are not typically subject to the requirements for workers compensation and employer liability insurance. If required by the client, and if it is available to us, we will obtain these two coverages prior to contract execution.

Overall Executive Search Experience

CB&A started its executive search business in 1998 from scratch. As a single father, he needed to stay nearby and so his goal was to become Florida's pre-eminent recruiter. In 2007 with his children mature, he branched out into other states. His firm has now worked in 32 states, from Maine to California and Florida to Alaska.

We have served clients in the states highlighed in blue.

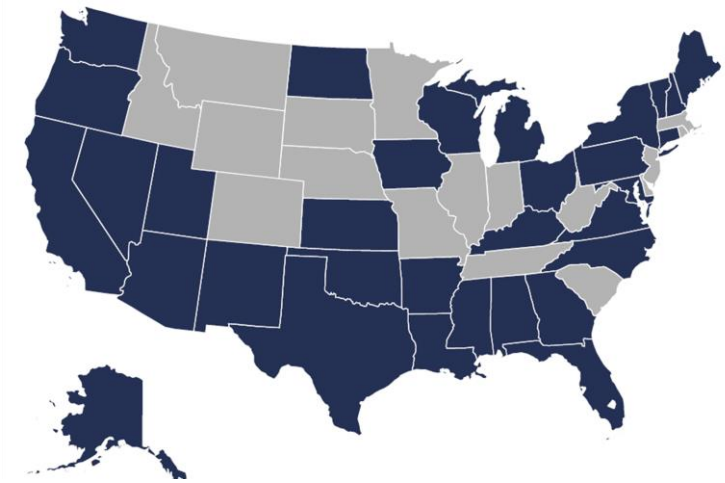

A complete list of our searches is contained in Appendix A.

2017 City / County Manager Searches Completed					
	Position	**Client**	**Population**	**Placement**	**Agency Size: Number of Employees**
1	City Manager	Fairborn, OH	33,452	Robert Anderson	250

2017 City / County Manager Searches Completed (continued)					
	Client	**Contact Name**	**Title**	**Phone**	**Email**
1	Fairborn, OH	Dan Kirkpatrick	Mayor	(937) 673-4178	dan.kirkpatrick@ci.fairborn.oh.us

2016 City / County Manager Searches Completed					
	Position	**Client**	**Population**	**Placement**	**Agency Size: Number of Employees**
1	City Manager	Cocoa Beach, FL	11,200	James McKnight	250
2	City Manager	Covington, VA	5,961	Richard Douglas	100
3	City Manager	Danville, VA	42,900	Ken Larking	1,100
4	Chief Administrator	El Paso, County, TX	827,700	Betsy Keller	480 under the Administrator
5	City Manager	Fort Myers, FL	70,918	Saeed Kazemi	944
6	City Administrator	Fort Smith, AR	87,350	Carl Geffkin	937
7	City Manager	Gainesville, FL	117,000	Anthony Lyons	1,300
8	City Manager	Mountlake Terrace	20,200	Scott Hugill	150
9	City Manager	Norwich, CT	40,500	John Salomone	430
10	City Manager	Orange City, FL	11,600	Dale Arrington	100
11	City Manager	Port St. Lucie, FL	171,400	Russell Blackburn	1,000
12	City Administrator	Prosser, WA	5,845	David Stockdale	50
13	City Manager	Savannah, GA	144,350	Roberto Hernandez	2,610
14	Township Manager	Springettsbury Township, PA	26,700	Benjamin Marchant	100

2016 City / County Manager Searches Completed (continued)					
	Client	**Contact Name**	**Title**	**Phone**	**Email**
1	Cocoa Beach, FL	Laurie Kalaghchy	City Clerk	(321) 868-3235	lkalaghchy@cityofcocoabeach.com
2	Covington, VA	Thomas Sibold	Mayor	(540) 958-8983	tomsibold@yahoo.com
3	Danville, VA	Sherman Saunders	Mayor	(434) 489-8738	sherman.saunders@danvilleva.gov
4	El Paso County, TX	Carlos Leon	Commissioner	(915) 546-2014	mmejia@epcounty.com
5	Fort Myers, FL	Randall Henderson	Mayor	(239) 321-7020	gpack@cityftmyers.com
6	Fort Smith, AR	Sandy Sanders	Mayor	(479) 784-2204	Mayor@fortsmithar.gov
7	Gainesville, FL	Todd Chase	Council Member	(352) 514-0168	chasetn@cityofgainesville.org
8	Mountlake Terrace, WA	Rick Ryan	Mayor Pro Tem	(206) 940-0108	RRyan@ci.mlt.wa.us
9	Norwich, CT	Deberey Hinchey	Mayor	(860) 823-3743	DHinchey@cityofnorwich.org
10	Orange City, FL	Tom Laputka	Mayor	(386) 775-5403	tlaputka@ourorangecity.com
11	Port St. Lucie, FL	Greg Orevac	Mayor	(772) 342-6072	mayor@cityofpsl.com
12	Prosser, WA	Randy Taylor	Mayor	(509) 875-4367	RTaylor@ci.prosser.wa.us
13	Savannah, GA	Eddie DeLoach	Mayor	(912) 210-1722	edeloach@savannahga.gov
14	Springettsbury Township, PA	Mark Swomley	Board Chair	(717) 805-3093	mark.swomley@springettsbury.com

2015 City / County Manager Searches Completed					
	Position	**Client**	**Population**	**Placement**	**Agency Size: Number of Employees**
1	City Manager	Cocoa Beach, FL	11,200	Ron McLemore	249
2	Village Manager	Estero, FL	23,100	Steve Sarkozy	6
3	City Manager	Fernandina Beach, FL	12,000	Dale Martin	268
4	County Manager(1)	Fulton County, GA	984,300	Richard Anderson	6,500
5	City Manager	Indianola, IA	14,800	Ryan Waller	92
6	City Manager	Mill Creek, WA	18,800	Rebecca Polizotto	62
7	City Manager	Normandy Park, WA	6,600	Mark Hoppen	27
8	City Manager	Ocala, FL	56,600	John Zobler	940
9	City Manager	Palm Bay, FL	105,000	Greg Lynk	748
10	City Manager	Seminole, FL	17,800	Ann Deal	159
11	City Manager	Sequim, WA	6,670	Charlie Bush	73
12	County Administrator	York County, VA	66,300	Neil Morgan	721

(1) Partial Search. We performed background checks for two candidates, coordinated the interviews and negotiated the employment contract. We did not search for candidates.

2015 City / County Manager Searches Completed (continued)					
	Client	**Contact Name**	**Title**	**Phone**	**Email**
1	Cocoa Beach, FL	Laurie Kalaghchy	City Clerk	(321) 868-3235	lkalaghchy@cityofcocoabeach.com
2	Estero, FL	Nick Batos	Mayor	(239) 292-2909	batos@estero-fl.gov
3	Fernandina Beach, FL	Ed Boner	Mayor	(904) 556-7554	eboner@fbfl.org
4	Fulton County, GA	Mark Massey	Clerk to the Commission	(404) 219-0451	Mark.Massey@fultoncountyga.gov
5	Indianola, IA	Kelly Shaw	Mayor	(515) 962-5300	lkshaw@cityofindianola.com
6	Mill Creek, WA	Pam Pruitt	Mayor	(425) 338-7158	ppruitt@cityofmillcreek.com
7	Normandy Park, WA	Susan West	Mayor	(206) 248-7603	Susan.West@ci.normandy-park.wa.us
8	Ocala, FL	Kent Guinn	Mayor	(352) 572-0312	kguinn@ocalafl.org
9	Palm Bay, FL	William Capote	Mayor	(321) 292-0382	Mayor@PalmBayFlorida.org
10	Seminole, FL	Leslie Waters	Mayor	(727) 430-7553	lwaters2@myseminole.com
11	Sequim, WA	Candace Pratt	Mayor	(360) 582-0114	cpratt@sequimwe.gov
12	York County, VA	Thomas Shepperd, Jr.	Chairman	(757) 868-8591	shepperd@yorkcounty.gov

2014 City / County Manager Searches Completed					
	Position	**Client**	**Population**	**Placement**	**Agency Size: Number of Employees**
1	County Manager	Alachua County, FL	251,400	Lee Niblock	855 under the Manager
2	City Manager	Bellevue, WA	132,000	Brad Miyake	1,229
3	City Manager	Connell, WA	4,200	Jed Crowther	19 + temp & seasonal
4	City Manager	Delray Beach, FL	64,100	Donald Cooper	800
5	Chief Administrator	El Paso County, TX	827,700	Stephen Norwood	480 under the Administrator
6	City Manager	Ellensburg, WA	18,300	Jack Akers	128
7	County Administrator[1]	Emmet County, MI	32,900	Marty Krupa	163
8	County Administrator	James City County, VA	67,000	Bryan Hill	750
9	City Manager	Marco Island, FL	13,300	Roger Hernstadt	210
10	City Manager	Mount Pleasant, MI	26,200	Nancy Ridley	119
11	City Manager	Mountlake Terrace, WA	20,200	Arlene Fisher	153
12	City Manager	North Miami, FL	60,600	Aleem Ghany	364
13	City Manager	Oakland Park, FL	42,800	David Hebert	240
14	Township Manager	Springettsbury Township, PA	26,700	Kristin Denne	100
15	County Administrator	St. Lucie County, FL	277,800	Howard Tipton	583 under the Administrator
16	City Manager	St. Pete Beach, FL	9,400	Wayne Saunders	88
17	Town Manager	Surfside, FL	6,000	Guillermo Omedillo	121
18	City Manager	Titusville, FL	43,900	Steve Larese	478
19	City Manager	Winchester, VA	26,900	Eden Freeman	560 under the Manager

[1] The actual title is County Controller but under Michigan Law, the duties are the same as those of a County Administrator.

2014 City / County Manager Searches Completed (continued)					
	Client	**Contact Name**	**Title**	**Phone**	**Email**
1	Alachua County, FL	Lee Pinkson	Commissioner	(352) 264-6900	lpinkoson@alachuacounty.us
2	Bellevue, WA	Kevin Wallace	Deputy Mayor	(425) 452-7810	KWallace@bellevuewa.gov
3	Connell, WA	Bruce Blackwell	Mayor	(509) 234-2701	bblackwell@connellwa.org
4	Delray Beach, FL	Cary Glickstein	Mayor	(561) 441-0222	glickstein@mydelraybeach.com
5	El Paso County, TX	Carlos Leon	Commissioner	(915) 546-2014	mmejia@epcounty.com
6	Ellensburg, WA	Rich Elliott	Mayor	(509) 962-7221	elliottr@ci.ellensburg.wa.us
7	Emmet County, MI	Jim Tamlin	Board Chair	(231) 622-2433	jtamlyn@emmetcounty.org
8	James City County, VA	Mary Jones	Board Chair	(757) 871-5977	mary.jones@jamescitycountyva.gov
9	Marco Island, FL	Larry Sacher	Councilor	(239) 588-0112	LSacher@marcocitycouncil.com
10	Mount Pleasant, MI	Kathleen Ling	Commissioner	(989) 773-7823	kling@mt-pleasant.org
11	Mountlake Terrace, WA	Rick Ryan	Mayor Pro Tem	(206) 940-0108	RRyan@ci.mlt.wa.us
12	North Miami, FL	Rene Monestine	City Attorney	(305) 895-9810	rmonestime@northmiamifl.gov
13	Oakland Park, FL	Shari McCartney	Mayor	(954) 295-0527	ShariM@oaklandparkfl.gov
14	Springettsbury Township,	George Dvoryak	Board Chair	(717) 683-4665	gdvoryak@Springettsbury.com
15	St. Lucie County, FL	Dan McIntyre	County Attorney	(772) 462-1420	mcintyred@stlucieco.org
16	St. Pete Beach, FL	Elaine Edmonds	Administrative Services Director	(727) 580-5178	elaine@stpetebeach.org
17	Surfside, FL	Daniel Dietch	Mayor	(305) 861-4863	ddietch@townofsurfsidefl.gov
18	Titusville, FL	Jim Tulley	Mayor	(321) 567-3702	Mayor@titusville.com
19	Winchester, VA	John Willingham	Council President	(540) 931-4655	John.Willingham@winchesterva.gov

2013 City / County Manager Searches Completed					
	Position	**Client**	**Population**	**Placement**	**Agency Size: Number of Employees**
1	City Manager	Ankeny, IA	45,000	David Jones	210
2	City Manager	Ashland, KY	21,000	Benjamin Bitters	300
3	Village Manager	Bal Harbour, FL	2,500	Jorge Gonzalez	37
4	County Manager	Clackamas County, OR	380,000	Donald Krupp	2,300
5	City Manager	Elmira, NY	29,000	Kim Middaugh	293
6	City Manager	Fruitland Park, FL	4,100	Gary La Venia	52
7	City Manager	Leesburg, FL	20,600	Alfred Minner	515
8	City Manager	Medina, WA	3,000	Michael Sauerwein	30
9	City Manager	Miramar, FL	122,000	Kathleen Woods-Richardson	960
10	City Manager	Monroe, NC	36,397	John D'Agostino	750
11	City Manager	Normandy Park, WA	6,300	Glenn Akramoff	27
12	County Manager	Okaloosa County, FL	170,000	Ernie Padgett	820
13	City Manager	Satellite Beach, FL	10,000	Courtney Barker	120
14	City Manager	Scottsdale, AZ	220,000	Fritz Behring	2,423
15	City Manager	Sunnyside, WA	15,000	Donald Day	95

2013 City / County Manager Searches Completed (continued)					
	Client	**Contact Name**	**Title**	**Phone**	**Email**
1	Ankeny, IA	Gary Lorenz	Mayor	(515) 371-2141	garyl@ljmd.com
2	Ashland, KY	Chuck Charles	Mayor	(606) 327-2001	ccharles@ashlandky.org
3	Bal Harbour, FL	Jaime Sanz	Council Member	(786) 427-4154	jsanz@balharbour.org
4	Clackamas County, OR	Paul Savas	Commissioner	(503) 655-8581	psavas@co.clackamas.or.us
5	Elmira, NY	Susan Skidmore	Mayor	(607) 738-3714	mayor@cityofelmira.net
6	Fruitland Park, FL	Chris Bell	Mayor	(352) 326-4291	cbell@fruitlandpark.org
7	Leesburg, FL	David Knowles	Mayor	(352) 326-9300	Allstate2@earthlink.net
8	Medina, WA	Michael Luis	Mayor	(425) 233-6400	mluis@medina-wa.gov
9	Miramar, FL	Yvette Colbourne	Commissioner	(954) 560-5161	ycolbourne@ci.miramar.fl.us
10	Monroe, NC	Lynn Keziah	Vice Mayor	(704) 221-2365	lkeziah@monroenc.org
11	Normandy Park, WA	Clarke C. Brant	Mayor	(206) 248-7603	clarke.brant@ci.normandy-park.wa.us
12	Okaloosa County, FL	Don Amunds	Commission Chair	(850) 585-8012	damunds@co.okaloosa.fl.us
13	Satellite Beach, FL	Frank Catino	Mayor	(321) 223-7700	fcatino@satellitebeach.org
14	Scottsdale, AZ	Suzanne Klapp	Vice Mayor	(480) 312-7402	sklapp@scottsdaleaz.gov
15	Sunnyside, WA	James Restucci	Mayor	(509) 643-4343	jrestucci@sunnyside-wa.gov

2012 City / County Manager Searches Completed					
	Position	**Client**	**Population**	**Placement**	**Agency Size: Number of Employees**
1	City Manager	Cape Coral, FL	154,300	John Szerlag	1,300
2	City Manager	Cocoa Beach, FL	11,200	Robert Majka	234
3	City Manager	Doraville, GA	8,500	Shawn Gillen	104
4	City Manager	Fayetteville, NC	208,000	Ted Voorhees	1,500
5	City Manager	Fort Pierce, FL	41,590	Robert Bradshaw	361
6	City Manager	Hallandale Beach, FL	37,100	Renee Crichton	449
7	County Administrator	Hernando County, FL	172,800	Leonard Sossamon	1,297
8	City Manager	Key West, FL	26,649	Bob Vitas	456
9	City Manager	Melbourne, FL	75,000	Michael McNees	927
10	Village Manager	North Palm Beach, FL	12,015	Ed Green	279
11	City Manager	Panama City Beach, FL	12,018	Mario Gisbert	250
12	City Manager	Sarasota, FL	51,917	Tom Barwin	599
13	City Manager	Sunrise, FL	4,260	Alan Cohen	1,203
14	City Manager	Yakima, WA [1]	91,000	Anthony O'Rourke	730
[1]	The manager's wife developed cancer after 3 months on the job and he resigned to be with her during treatment. We repeated the search at no cost even though it was outside the scope of our warranty.				

2012 City / County Manager Searches Completed (continued)					
	Client	**Contact Name**	**Title**	**Phone**	**Email**
1	Cape Coral, FL	John Carioscia	Council Member	239-242-3288	rerbrick@capecoral.net
2	Cocoa Beach, FL	Laurie Kalaghchy	City Clerk	(321) 868-3235	lkalaghchy@cityofcocoabeach.com
3	Doraville, GA	Donna Pittman	Mayor	(678) 328-9181	donna.pittman@Doravillega.us
4	Fayetteville, NC	Jim Arp	Mayor Pro Tem	(910) 728-2569	JArp@ci.fay.nc.us
5	Fort Pierce, FL	Anne Satterlee	Communications Manager	(772) 460-2200	asatterlee@city-ftpierce.com
6	Hallandale Beach, FL	Joy Cooper	Mayor	(954) 457-1318	jcooper@hallandalebeachfl.gov
7	Hernando County, FL	Ronald F. Pianta	Assistant County Administrator	352) 754-4002	RPianta@co.hernando.fl.us
8	Key West, FL	Shirley Freeman	Chair, Citizen's Advisory Committee	(305) 304-1975	shirleyfreemankeywest@gmail.com
9	Melbourne, FL	Paul Googleman	City Attorney	(321) 608-7200	cityattorney@melbourneflorida.org
10	North Palm Beach, FL	David Norris	Council Member	(561) 841-3355	dnorris@village-npb.org
11	Panama City Beach, FL	Gale Oberst	Mayor	(850) 235-1541	goberst@pcbgov.com
12	Sarasota, FL	Susanne Atwell	Commissioner	(941) 954-4115	Suzanne.Atwell@sarasotagov.com
13	Sunrise, FL	Kim Kisslan	City Attorney	(954) 746-3300	KKisslan@sunrisefl.gov
14	Yakima, WA	Micah Cawley	Mayor	(509) 901-9114	micah_cawley@ci.yakima.wa.us

2011 City / County Manager Searches Completed					
	Position	**Client**	**Population**	**Placement**	**Agency Size: Number of Employees**
1	City Manager	Albany, GA	76,000	James Taylor	863
2	City Manager	Chamblee, GA	17,000	Niles Ford	106
3	County Administrator	Clay County, FL	160,000	Stephanie Kopelousos	1,514
4	City Manager	Destin, FL	12,300	Mary Ann Ustick	65
5	Village Manager	Key Biscayne, FL	12,350	John Gilbert	115
6	City Manager	Madeira Beach, FL	4,260	Shane Crawford	71
7	Borough Manager	Matanuska-Susitna Borough,	88,000	John Mossey	275
8	City Manager	North Port, FL	55,800	Jonathan Lewis	569
9	City Manager	Orange Park, FL	9,100	Cindy Hall	110
10	Village Manager	Pinecrest, FL	19,400	Yocelyn Gomez	158
11	County Administrator	Polk County, IA	431,000	David Jones	1,300
12	City Manager	Portland, ME	65,000	Michael Rees	1,100
13	City Manager	Sunny Isles Beach, FL	17,000	Alan Cohen	178
14	City Manager	Tacoma, WA	198,400	T.C. Broadnax	3,872
15	City Manager	Yakima, WA	91,000	Don Cooper	730

2011 City / County Manager Searches Completed (continued)					
	Client	**Contact Name**	**Title**	**Phone**	**Email**
1	Albany, GA	Nathan Davis	City Attorney	(229) 431-2805	NDavis@albany.ga.us
2	Chamblee, GA	Marc Johnson	Interim Manager / Police Chief	(404) 819-9346	chiefmj@chambleepd.com
3	Clay County, FL	Travis Cummings	Former Commission Chair	(904) 376-5189	Not Available
4	Destin, FL	Chuck Garcia	Human Resources Director	(850) 837-4242	cgarcia@cityofdestin.com
5	Key Biscayne, FL	Conchita Alvarez	Village Clerk	(305) 365-5506	calvarez@keybiscayne.fl.us
6	Madeira Beach, FL	Travis Palladeno	Mayor	(727) 239-5549	tpalladeno@madeirabeachfl.gov
7	Matanuska-Susitna, AK	Sonya Conant	Human Resources Director	(907) 746-7432	Sonya.Conant@matsugov.us
8	North Port, FL	Jim Blucher	Vice Mayor	(941) 628-2916	jblucher@cityofnorthport.com
9	Orange Park, FL	Sarah Campbell	Town Clerk	(904) 278-3018	scampbell@townop.com
10	Pinecrest, FL	Guido Inguazo	Village Clerk	(305) 234-2121	inguanzo@pinecrest-fl.gov
11	Polk County, IA	E.J. Giovannati	Former County Supervisor	(515) 371-0782	EJGiovannetti@hhlawpc.com
12	Portland, ME	Cheryl Leeman	Search Chair / Council Member	(207) 774-4308	cl@portlandmaine.gov
13	Sunny Isles Beach, FL	Norman Edelcup	Mayor	(305) 792-1701	NSEdelcup@aol.com
14	Tacoma, WA	Joy St. Germain	Human Resources Director	(253) 591-2060	jstgermain@ci.tacoma.wa.us
15	Yakima, WA	Micah Cawley	Mayor	(509) 901-9114	micah_cawley@ci.yakima.wa.us

II. Proposed Project Staff

Project Team and Involvement

Colin Baenziger & Associates is an experienced recruiting firm which strongly believes that the majority of the search work should be conducted by one knowledgeable person. Colin Baenziger will be that person—he will serve as your project manager. He will conduct the interviews with the elected officials, search for strong candidates, discuss the position with those candidates, recruit them, conduct the interviews with the candidates, conduct the background investigations, oversee the interview process, and assist with the contract negotiations. In addition to fifteen years as a consultant, Mr. Baenziger spent ten years in government as a senior manager. Overall, he has been the firm's Project Manager for more than one hundred and twenty-five city and county manager searches. Prior to starting CB&A, he spent over 20 years hiring key staff.

Rick Conner, vice president, will serve as the Deputy Project Manager and support for Mr. Baenziger. He has over 30 years of in local government and in executive recruiting. He earned Bachelors of Science Degrees in Business Administration and Engineering from the University of Missouri.

Lynelle Klein, vice president for operations, will be responsible for coordinating the advertising and production of the materials we will present to you as described in the Recruitment Approach.

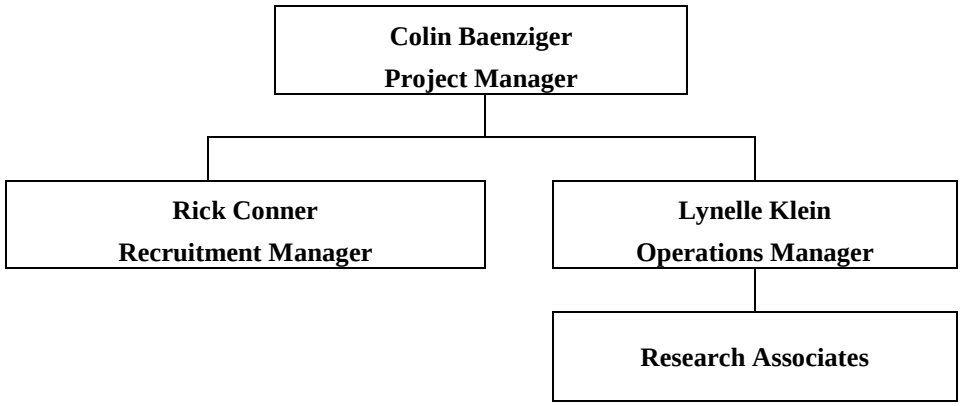

Colin Baenziger, M.P.A.

Principal

Colin Baenziger is a student of local government and responsible for the executive recruitment functions at Colin Baenziger & Associates. Over the years, he has worked with a number of cities on recruitments and on management, operational, and organizational issues. As a former manager and someone who actively consults with governments, he understands what it takes to do the manager's job effectively. Furthermore, because he is active in a number of professional associations, he knows many of the nation's managers on a first-name basis.

Some of Mr. Baenziger's searches for local governments include:

- City Manager, Coral Gables, FL (population 42,000)
- City Manager, Cottonwood Heights, UT (population 34,000)
- City Manager, Fife, WA (population 8,200)
- City Manager, Fayetteville, NC (population 208,000)
- Village Manager, Key Biscayne, FL (population 11,000)
- Economic Development Director, Loudoun County, VA (population 326,000)
- Community Development Director, Miami, FL (population 373,000)
- Borough Manager, Matanuska-Susitna Borough, Alaska (population 88,000)
- City Manager, Mount Dora, FL (population 12,000)
- County Manager, Clackamas County, OR (population 380,000)
- City Manager, Palm Coast, FL (population 51,000)
- City Manager, Portland, ME (population 65,000)
- City Manager, Roanoke, VA (population 96,000)
- City Manager, Tacoma, WA (population 200,000)
- General Manager, Tampa Bay Water Authority (serving a population of 2.4 million)
- County Manager, Union County, NC (population 290,000)

Other recent efforts include a strategic planning session for the Florida Association of Special Districts, an operational review of Tamarac's water utility, a business practices review for a division of Martin County government, an operational reconciliation for Palm Beach County Water, development of an automated system to pay royalties to featured recording artists for the Recording Industry Association of America, and a review of financial procedures for a division of the Marriott Corporation.

Mr. Baenziger has a master's degree with distinction in public administration from Cornell University's Graduate School of Management, and a Bachelor of Arts degree from Carleton College. He is also active in the International City Management Association and the Florida City and County Management Association. He has also been called upon frequently to speak at conferences of the Utah and Florida City/County Managers' Associations, and the Florida Public Personnel Association.

Rick Conner, P.E.

Vice President

Rick Conner is a recent addition to CB&A's strong cadre of municipal operations experts. With over 30 years of management experience in local government, he has seen it all and done most of it. He possesses keen analytical skills and the ability to slice through critical issues. As a result, he is another outstanding weapon in the firm's arsenal of experts. His years in local government and his many licenses and certifications help him to judge talent quickly and effectively.

In addition to his experience as a City Manager, Rick's previous positions such as a Public Works Director, gives him an excellent perspective of the needs of local government operations and staffing.

Prior to joining Colin Baenziger & Associates in 2012, some of the top leadership positions that Rick has held include:

- City Manager of Sunny Isles Beach, Florida,
- City Manager of Portland, Texas,
- City Manager of Marble Falls, Texas,
- Public Works Director of Nashville/Davidson County, Tennessee, and
- Public Works Director of Bryan, Texas

While serving in these positions, Rick received national recognition for his Customer Service programs. Over his career, Mr. Conner has been involved in a variety of recruitments. Some of these include:

- City Manager, Fayetteville, NC,
- City Manager, Sarasota, FL,
- City Manager, Cocoa Beach, FL
- Chief Executive Officer/General Manager, Des Moines (IA) Water Works,
- Finance Director/Procurement Officer for a bedroom community to Corpus Christie, TX,
- Accounting Director for a medium size West Texas city
- Police Chief for a Florida barrier island community,
- Water and Wastewater Director for a medium size, central Texas city,
- Airport Fixed Base Operator for a Texas university community, and
- Airport Manager for a medium size Texas university city.

Rick holds a Bachelor of Science in Business Administration and a Bachelor of Science in Civil Engineering from University of Missouri. He also worked towards Masters Degrees in both Math and Civil Engineering before joining the work force. He is a Registered Land Surveyor and a Professional Engineer in Missouri, as well as a Professional Engineer in Florida, Tennessee and Texas.

Lynelle Klein

Vice President for Operations

Ms. Klein is a skilled professional with a wealth of public and private sector experience. Her particular expertise is in special projects, compensation surveys, and background checks for our executive search candidates. She feels that each client must be properly served, and that can only be done by devoting her utmost attention to their particular concerns and by finding creative ways to solve their problems. In her book, the client comes first.

Since beginning her working relationship with Colin Baenziger & Associates in 2010, Ms. Klein has been involved in virtually every executive search the firm has conducted.

Some of the more notable searches in which she has played a key role include**:**

- City Manager, Delray Beach, FL (64,100)
- City Manager, Doraville, GA (population 8,500)
- City Manager, Indianola, IA (population 14,800)
- Police Chief, Farmington, NM (population 45,000)
- City Manager, Leesburg, FL (population 21,000)
- City Manager, Mill Creek. WA (population 18,800)
- City Manager, Miramar, FL (population 122,000)
- City Manager, Norwich, CT (population 40,300)
- City Manager, Seminole, FL (17,800)
- City Manager and Finance Director Sunnyside, WA (population 16,000)
- City Manager, Winchester, VA (population 16,000)
- County Manager, Alachua County, FL (population 253,500)
- County Administrator, Clackamas County, OR (population 383,900)
- County Administrator, James City County, VA (population 70,500)
- County Manager, St. Lucie County, FL (population 283,900)
- County Administrator, York County, VA (population 66,300)
- County Attorney, Fulton County, GA (population 992,000)
- Director, Growth Management, Collier County, FL (population 340,000)
- Solid Waste Director City of Tampa, FL (population 347,000)

Ms. Klein's prior employment was primarily in the private sector. For over 15 years she provided contract financial and administrative services to companies who did not require full time office staff. Some of her clientele included TLC Cabulance, Clear and Clean Pool Service, Elizabeth Fountain Interiors, a published author and a landscaping company. Ms. Klein has an Associate's Degree from Brigham Young University in Rexburg, Idaho. She currently resides in King County, WA.

Some of CB&A Clients…

Village of Bal Harbour, FL

Village Manager

Broward County, FL

County Administrator

Clay County, FL

County Administrator
County Attorney

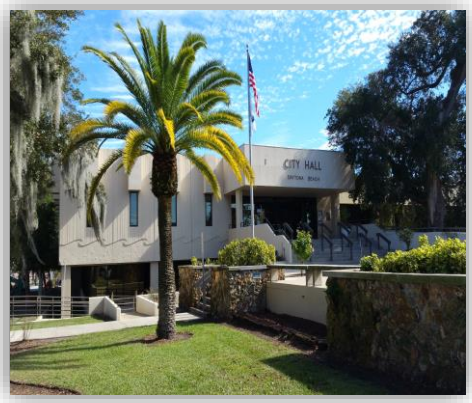

City of Daytona Beach, FL

City Manager
City Attorney
Finance Director

II. Search Methodology

The following search methodology has been refined over the past nineteen years and now is virtually foolproof. We will integrate your ideas into the process. Our goal is to ensure you have the right people to interview as well as the information you need to make the right decision.

Phase I: Information Gathering and Needs Assessment

Task One: Needs Assessment

An important part of the recruiter's work is selling the community to the very best candidates (including those that are not actively looking for the next job) while also providing an accurate portrayal of the community and the opportunity. In order to do this, CB&A must first determine the needs of the client and the characteristics of the ideal candidate. Our approach is as follows:

- Compile background information from the jurisdiction's website and other sources.
- Interview the Mayor and Commission, other key parties (such as City staff) and stakeholders (such as community groups, business owners, residents, government officials and property owners). Our goal is to develop a strong sense of your organization, its leadership, its short and long term expectations, and its challenges;
- Determine the characteristics of the ideal candidate. These will likely include experience, longevity, education, personality, demeanor, and achievements as well as other items the Commission and stakeholders consider important), and
- Determine a reasonable compensation package.

We will also finalize the timeline so candidates can mark their calendars well in advance and will be available when the Commission wishes to conduct the interviews.

If the City wishes, we routinely incorporate meetings with other stakeholders (such as the business community, the non-profit community, City staff and so on) to gather their insights. These forums are valuable as they provide additional perspectives and a better understanding of the environment the Manager will be working in.

Task Two: Develop Position Description and Recruitment Materials

Based on the information we gather, CB&A will next develop a comprehensive recruitment profile. We will provide our draft for your review and comment. We will then meet with the Commission to discuss the results of our interviews and the resulting recruitment profile. Your suggestions will be incorporated, and the final document prepared. A sample of our work is included as Appendix B. Other samples can be found on our firm's website under the "Executive Recruitments" / "Active Recruitments" tabs.

Phase II: Recruitment

Task Three: Recruit Candidates

CB&A uses a number of approaches to identify the right people for this position. We say people, and not person, because our goal is to bring you six to ten excellent semi-finalists, all of whom will do the job extraordinarily well and who are so good you will have a difficult time choosing

among them. You then select the top three to five people to interview and ultimately choose the candidate who is the best fit with you and your community. The approaches we use are:

- ***Networking:*** The best approach is diligent outreach. We will network with our colleagues and consult our data base. As we identify outstanding candidates (many of whom are not in the market), we will approach them and request that they apply. Often excellent candidates are reluctant to respond to advertisements because doing so may alienate their current employers. When we approach them, their credentials are enhanced rather than diminished. We also use LinkedIn as a source of candidates.
- ***Advertising*** While we will seek out the best, we will not ignore the trade press as it often also yields strong candidates. We intend to advertise through organizations such as the International City/ County Management Association, Florida League of Cities, Florida City and County Management Association and so on. We will also post it on our website, ***www.cb-asso.com***. We generally do not use newspapers or generic websites because while they produce large numbers of applications, they generally do not produce the type of candidates our clients are seeking. If the City wants to have ads placed in local newspapers, national newspapers and/or generic websites, it will need to bear the cost.
- ***Email:*** We will also e-mail the recruitment profile to our listserv of over thirteen thousand managers and professionals who are interested in local government management. One of the advantages of e-mail is that if the recipient is not interested, he/she can easily forward the recruitment profile to someone else who may be interested.

Phase III: Screening and Finalist Selection

Task Four: Evaluate the Candidates

Based on our most recent recruiting efforts, we anticipate receiving resumes from sixty to one hundred applicants. We will narrow the field as described above and present information on candidates to the Mayor and Commission. This process requires a mixture of in-depth research and subjective evaluation. Our process is as follows.

It should be noted that selecting strong candidates is more an art than a science. While we consider standard ranking factors and the elements of the job, ultimately the most important factor is who we believe will be a good fit with the City and the community. Typically forty percent of our finalists are women and/or minorities.

Specifically, our efforts will involve:

Step One. Resume Review. CB&A will evaluate all resumes and identify the eight to fifteen high quality candidates.

Step Two. Screening Interview. Our lead recruiter, and possibly other senior representatives of the firm, will interview each of these candidates. Using what we learned in Phase I and our experience as managers and recruiters, as well as our unique ability to assess candidates, we will determine whether or not to consider them further.

Step Three. Prepare a Report. We will prepare a written report summarizing the Results of the Recruitment and the top seven to ten candidates. We will forward our report to the Commission.

Step Four. Evaluate the Best Candidates. We will develop materials and background investigations for the to five to six candidates. For those that remain in consideration, CB&A will:

- **Ask the Candidates to Prepare a Written Introduction:** We will ask the candidates to prepare a written introduction to themselves as part of their preliminary background checks. This is done for several reasons. First, it allows the candidates to tell their own story and balance the negativity that is so often characteristic of the press. It also allows the City to evaluate the candidates written and communicative skills.

- **Candidate Disclosure Statement:** We will ask candidates if there is anything controversial in their background that we should be made aware of prior to further consideration. While it is unlikely that we find anything not previously publicized in the press, we believe redundant checks offer superior security for our client.

- **Interviews of References:** We tell the candidate with whom we wish to speak. These include current and former Commission Members, the municipal attorney, the external auditor, staff members, peers, news media representatives, the director of the local chamber of commerce, community activists, and others who know the candidate. We also attempt to contact some individuals who are not on the candidate's list. Typically we reach eight to ten people and prepare a written summary of each conversation.

- **Legal Checks:** Through our third party vendor, American DataBank, we will conduct the following checks: criminal records at the county, state and national level; civil records for any litigation at the county and federal level; and bankruptcy and credit.

  Search the Internet and Newspaper Archives: Virtually every local newspaper has an archive that provides stories about perspective candidates, the issues they have dealt with, how they resolved them and the results. These articles can also provide valuable insights into the candidate's relationship with the public and the governing body. Of course, not all news sources are unbiased and we consider that in our evaluation. This step is conducted in order to quickly discover candidates with problems in their backgrounds and eliminate them.

- **Verification of Education:** We also verify claimed educational degrees to assure the candidate is being totally forthright.

- **Verification of Work History:** We verify employment for the past fifteen years.

The goal in conducting these checks is to develop a clear picture of the candidates and to determine which best meet the criteria established in Phase I. Each of the avenues we pursue adds a piece of the puzzle. We will crosscheck sources, search for discrepancies, and resolve them when we find them. When sensitive or potentially embarrassing items are discovered, they are thoroughly researched. If we conclude the situation is damaging or even questionable, the situation reported to the City, with the City's concurrence, the candidate will be dropped from further consideration.

> *Note: We firmly believe that all background work we have outlined above should be completed early in the process. That way the client knows the individuals to be interviewed are all top performers and do not have anything embarrassing in their pasts that might come to light after selection. It also means that once our client has made a selection, it can move forward promptly, negotiate a contract and make an announcement.*

Task Five: Preparation and Presentation of Candidate Materials

For the selected candidates, CB&A will compile the information we have developed into a complete written report for each recommended candidate. Specifically, this information will include: the candidates' resumes, introductions, references, background checks and internet / newspaper archive search results. A complete sample candidate report is included as Appendix C. We will also provide some advice on interviewing, a series of questions the elected officials may wish to ask (as well as some areas that it is not wise to get into), and some logistical information. The preceding information will be forwarded to you *electronically*.

Task Six: Finalist Selection

Approximately a week after the City has received the candidate materials, CB&A will meet with the elected officials to discuss our findings and make a final determination concerning who will be invited to interview. The City will then select four to six candidates to interview.

Task Seven: Notify All Candidates of Their Status

We will notify the finalists by telephone and give them the opportunity to ask additional questions. We will also provide them with information concerning the interviews and travel if necessary.

CB&A will inform those not selected of their status. Part of the notification will include advice concerning the candidates' resume and/or cover letter so, even though they were not selected to go forward, they will have gained something valuable from participating in the process.

Phase IV: Coordinate the Interview Process and City Manager Selection

Task Eight: Coordinate the Candidate Assessment Process

Prior to the interviews, we will recommend an interview/assessment process for the City's review including means to evaluate the candidates' communication skills, interpersonal skills, and decision-making skills. As part of the process, we will recommend the City Commission observe the finalists in a number of settings. We will also recommend you invite the finalists' spouses so they can spend time in and evaluate your community.

Day #1: The finalists are given a tour of the community by a knowledgeable staff member or resident.

Later, that evening, the Mayor and Commission host a reception for the candidates. The purpose is to observe how the finalists respond to a social situation. Your next City Manager will, after all, represent your local government in numerous venues. It is thus important to know how the individual will respond in a social setting. The reception also serves as an ice-breaker whereby the Commission Members and the candidates get to know one another informally.

Day #2: Beginning at approximately 8:00 a.m., the Mayor and Commission as a group will interview each candidate one at a time for approximately an hour. Part of the interviews may include a PowerPoint presentation so the Commission can observe the candidates' presentational skills.

At approximately 1:30 p.m., each candidate will interview individually with each elected official for approximately 30 minutes. These meetings provide the Commission Members with an opportunity to assess how the candidates might interact with them on an individual basis. It is very important to know if good chemistry exists. Ultimately, Managers succeed and fail based on their interaction with the Commission and the one-on-one interviews are an excellent way to test that interaction.

Task Nine: Debriefing and Selection

In terms of the final selection, we have developed a simple methodology that moves the elected body quickly and rationally to the desired outcome. Once the selection has been made, CB&A will notify the finalists of their status. Candidates are eager to know and we feel it is important to keep them informed.

Phase V: Negotiation and Continuing Assistance

Task Ten: Notification, Contract Negotiations and Warranty

We will then assist in the employment agreement negotiations. Generally, a member of the elected body and the attorney conduct the actual negotiations while we provide advice and assistance concerning the compensation package and contract. We can also take the lead role in the negotiations if desired. We have a standard contract you are welcome to use. Your attorney, of course, will prepare the final contract. Since the basic parameters will have been discussed with the candidates and the candidates have been thoroughly vetted, we expect a relatively prompt agreement.

Task Eleven: Continuing Assistance

Our work is not done when the contract is executed. We will stay in touch with you and your new City Manager. Our goal is to be there to assist in resolving any issues that arise before they become intractable. In fact, at your request, we will conduct a team-building workshop, at no charge, to resolve any difficulties. We simply feel it is part of our job to assure a successful relationship.

Communications: We will provide weekly reports about the status of the search, in writing or by phone, depending upon your preference. At significant milestones we will make the reports in person. We are also available at any time, day or night, to address any questions you have along the way. To do so, we will provide you with our cellphone numbers and you should feel comfortable contacting us whenever you have a question whether it is directly related to the search or, for that matter, anything else related to local government. We want to be responsive and to assist in any way we can.

The City's Obligations

The City will be responsible for providing the facilities for the interview process, coordinating lodging for candidates from outside the area, and making arrangements for the reception. The City will also be responsible for reimbursing the candidates for all expenses associated with their travel, meals, and incidentals for the interview weekend.

The City should also plan to provide the following information, if it is not available on the City's website, to each of the finalists: the current year budget, an organizational chart, the latest completed audit and management letter, any current strategic and long range plans, a copy of the City Charter, any job descriptions and other materials defining the role and duties of the City Manager, and any evaluations of the organization completed in the last year.

IV. Timeline

Possible Project Schedule

The following is the project schedule we suggest for this recruitment and assumes we are selected to perform the search on May 22nd. We realize the schedule may need to be adjusted to accommodate the Mayor's and Commission Members' availability.

Phase I: Needs Assessment / Information Gathering

May 31st: CB&A begins meeting with the Mayor and Commission Members and, if suggested, other stake holders to understand the job and its challenges.

June 6th: CB&A submits the draft of the full recruitment profile to the City for its review. Comments will be due back by June 13th.

Phase II: Recruiting

June 16th: CB&A posts the full recruitment profile on its website and submits it to the appropriate publications. It is also e-mailed to over 13,400 local government professionals.

July 7th: Closing date for submission of applications.

July 14th: CB&A reports on the results of the recruitment.

Phase III: Screening, Reference Checks and Credential Verification

August 7th: CB&A forwards its candidate report and materials to the City. These will include the candidates' resumes, the candidate introduction, and the results of our reference, background and Internet/newspaper archives checks.

August 14th: City selects candidates for interviews.

Phase IV: Interview Process Coordination and City Manager Selection

August 24th: City holds reception for the finalists.
August 25th: One-on-one and full Commission Interviews and possible decision.

Phase V: Negotiation, Warranty & Continuing Assistance

Post-Selection: CB&A works with City representatives and the selected candidate on an employment agreement.

More CB&A Clients…

City of Roanoke, VA

City Manager
City Attorney
Economic Development Director
Finance Director
Human Resources Director
Planning, Building and Development Director

City of Sarasota, FL

City Manager

City of Sunrise, FL

City Manager
Human Resource Director

City of West Palm Beach, FL

Assistant City Manager
Finance Director
Fire Chief
Human Resources Director
Parks and Recreation Director

VIII. Fee and Warranty

Fee

CB&A offers a firm, fixed fee of $24,500 ***which includes all our expenses and costs.*** In other words, the only thing the City will pay CB&A is the agreed upon fee. The only other costs the City will be responsible for are the costs associated with the candidates' (and spouses, if invited) travel, accommodations and meals for the interview process. The advantage to the City is it knows exactly what it will pay. The advantage to CB&A is that we do not have keep track of every minor expense.

We will bill the fee as the phases are completed and according to the following schedule:

Requested Services for City Manager	
Phase I: Needs Analysis / Information Gathering	$ 3,000
Phase II: Recruiting	10,000
Phase III: Screening	9,000
Phase IV: Interview Process Coordination and Manager Selection	1,500
Phase V: Negotiation and Continuing Assistance	1,000
Firm, Fixed Fee Total	$24,500

If the City asks us to perform work that is clearly beyond the scope of this proposal, it will be billed at a rate of $150 per hour. No such work will be performed without your written authorization. Please note, as previously stated, that we have neither billed nor requested additional funds beyond our originally quoted fee even when we have been entitled to it.

Warranty

Colin Baenziger & Associates offers the best warranty in the industry. We can offer it because we have confidence in our work. Provided the City instructs us with conducting a full search (Phases I-V) and assuming it selects from among the candidates we recommend, we warrant the following:

1) We will not approach the selected candidate for any other position as long as the individual is employed by the City.
2) If the selected individual leaves for any reason other than an act of God (such as death) within the first year of employment, CB&A will immediately repeat the search at no additional cost.
3) If you are not satisfied with the candidates we present, CB&A will repeat the search until you are satisfied.
4) Our price is guaranteed and will not be exceeded for any reason, even if conditions change after the contract is executed.

More CB&A Clients…

City of Greensboro, NC

City Manager

Matanuska-Susitna Borough, AK

Borough Manager

Union County, NC

County Manager

Loudoun County, VA

Economic Development Director
Human Resources Officer
General Services Director
Management & Financial Services Director
Building & Development Director

VI. References

The following are relatively comparable and relatively recent City Manager placements

City Manager, Cape Coral, FL (population 154,300)

Contact: Council Member John Carioscia at (239) 560-7822
or **jcarioscia@capecoral.net**

Cape Coral is located near Florida's west coast near Fort Myers and approximately 130 miles south of Tampa. CB&A began its work on December 15, 2011 to find Cape Coral's next **City Manager**. Our work included recruiting and advertising for candidates, conducting background checks, selecting the most qualified, recommending them for interviews, coordinating the interview process, and assisting in the contract negotiations. Interviews took place on March 22nd and 23rd and *John Szerlag, then City Manager of Troy, MI,* was selected on March 26th. Colin Baenziger served as the project manager for this search.

City Manager Recruitment, City of Cooper City, FL (population 32,000)

Contact: Former Mayor Debby Eisinger at (954) 434-4300, or
mayordebby@gmail.com
Former Council Member Neil de Jesus at
(954) 558-4734 or **NealDJ@bellsouth.net**

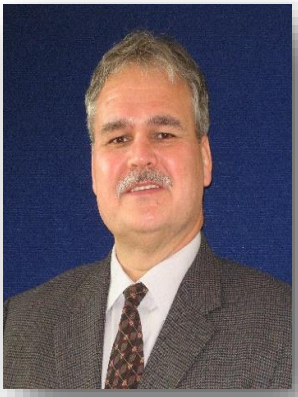

CB&A began work in May 2008, to assist the city in finding its next **Manager**. Our work included scouring the nation to find the right person for the job, interviewing the candidates, conducting through background checks, recommending finalists for the city to interview and helping with the contract negotiations. *Bruce Loucks, formerly County Administrator for Charlotte County, Florida,* was selected in early August, 2008.

City Manager, Indianola, IA (population 14,800)

Contact: Mayor Kelly Shaw at (515) 962-5300, or
KShaw@CityOfIndianola.com

CB&A was hired in mid-September, 2015, to find the City's next **City Manager.** Our work included searching the nation to find the right person for the job, interviewing the candidates, conducting thorough background checks, and recommending finalists for the county to interview. Through extensive outreach efforts, CB & A fielded an excellent group of candidates for the position. The City selected *Ryan Waller, formerly Assistant County Administrator with Lake County, IL* on December 5th.

County Administrator, James City County, VA (population 70,500)

Contact: Board Chair Michael Hipple at 757-634-9895 or
michael.hipple@jamescitycountyva.gov

James City County has a long and storied history and is home to colonial Williamsburg, VA. CB&A was hired in March 2014 to find the County's next County Administrator. We were asked to search for someone knowledgeable of local government but who specifically knew how to maximize operational efficiency and effectiveness. Our work involved searching the nation for just the right candidate. When we did not find just the right candidate after our first search effort, we restarted the process. Beyond seeking the best candidates, our work involved candidate screening, complete and thorough background checks, and coordinating the interviews and selection process as well as providing advice concerning the contract. On July 29th, the County Board of Supervisors selected *Mr. Bryan Hill, then Deputy County Administrator for Beaufort County, SC.*

City Manager, City of Melbourne, FL (population 76,000)

Contact: ***Mayor Kathy Meehan at (321) 984-7588, or***
cityhall@melbourneflorida.org
Melbourne City Hall
900 E. Strawbridge Avenue
Melbourne, FL 32901

Melbourne is located Florida's east coast near Cape Canaveral. On August 30th, Colin Baenziger and Associates was selected by the City of Melbourne to find its next **City Manager**. Our work included recruiting and advertising for candidates, conducting background checks, selecting the most qualified, recommending them for interviews, coordinating the interview process, and assisting in the contract negotiations. *Mr. Michael McNeese, formerly City Manager of Sarasota, FL,* was selected to become Melbourne's next City Manager on November 30th.

City Manager, Miramar, FL (population 122,000)

Contact: Commissioner Yvette Colbourne at (954) 560-5161, or
ycolbourne@ci.miramar.fl.us

CB&A began the search for Miramar's next City Manager on May 13, 2013. We conducted a nationwide search with an emphasis on Southeast Florida. Our work included extensive screening and background checks as well as coordinating the interview process and negotiating the compensation package with the selected candidate. The City selected *Ms. Kathleen Woods-Richardson, formerly Director of Public Works and Waste Management for Miami-Dade County,* on August 21, 2013. She began working for the City on September 9, 2013.

City Manager, North Port, FL (population 55,800)

Contact: ***Former*** Mayor Jim Blucher at (941) 628-2916

North Port is located near Florida's west coast approximately halfway between Naples and Tampa. CB&A began its work in early December 2010 to find North Port's next **City Manager**. Our work included recruiting and advertising for candidates, conducting background checks, selecting the most qualified, recommending them for interviews, coordinating the interview process, and assisting in the contract negotiations. Interviews took place on March 4th and 5th and *Jon Lewis, former Assistant City Manager for Palm Bay, FL,* was selected on March 11th. Colin Baenziger served as the project manager for this search.

City Manager, City of Savannah, GA (population 96,000)

Contact: Mayor Eddie DeLoach at (912) 210-1722, or
edeloach@savannahga.gov
Search Committee Chair and Alderman Van Johnson at
(912) 604-4104, or **AldermanJohnson@aol.com**

CB&A was hired in late April 2016 to find Savannah's next **City Manager**. We were asked to identify someone with a strong background in working on redevelopment and social issues (specifically, generational poverty). Our efforts involved searching the country for strong candidates, conducting extensive background checks, recommending a strong field of candidates, overseeing the interviews and providing a small amount of assistance with the contract negotiations. *Roberto Hernandez, formerly the Deputy County Manager of Broward County, FL, and Fulton County, GA,* was selected in early August.

County Manager, St. Lucie County, FL (population 283,900)

Contact: County Attorney Dan McIntyre at (772) 462-1417 or
McIntyreD@StLucieCo.org

St. Lucie County is located on Florida's Atlantic Coast and approximately 130 miles north of Miami. CB&A was selected in January 2014 to help find the County's next **County Administrator**. Our work included recruiting and advertising for candidates, conducting background checks, selecting the most qualified, recommending them for interviews, coordinating the interview process, and assisting in the contract negotiations. Interviews took place on April 18th and *Howard Tipton, former Deputy County Administrator for Orange County, FL,* was selected. on April 22nd.

City Manager, Winchester, VA (population 16,000)

Contact: Council Chair John Willingham at (540) 931-4655, or ***John.Willingham@WinchesterVA.gov***

CB&A was hired in mid-March 2014 to find Winchester's next **City Manager**. The City was seeking someone with energy and enthusiasm to move the City forward. We accepted the challenge and searched the nation for just the right person. Our efforts included extensive outreach and we an excellent group of high quality candidates. We then performed background checks, coordinated the interview process, and assisted the Town in selecting Eden Freeman, *formerly Assistant City Manager for Sandy Springs, GA*, in early June.

Candidate References

While it is important to deliver what the City expects, it is also important to keep candidates informed and to treat them with respect and dignity. Accordingly, we have provided references from four of those candidates.

Placement	Formerly	Recruited To Be	Contact at
Dale Martin	City Manager Winchester, CT	City Manager Appointed September 2015	(904) 557-5047 **dmartin@fbfl.org**
Eden Freeman	Assistant City Manager Sandy Springs, GA	City Manager Winchester, VA Appointed June, 2014	(540) 667-1815 **citymanager@ winchesterva.gov**
Bryan Hill	Deputy County Administrator Beaufort County, SC	County Administrator James City County, VA Appointed July 2014	(757) 253-6604 **bryan.hill@ jamescitycountyva.gov**
John Salomone	Town Manager Newington, CT	City Manager Norwich, CT Appointed, December 2015	(860) 539-8906 **cmoffice@cityofnorwich.org**

COLIN BAENZIGER & ASSOCIATES

EXECUTIVE RECRUITING

PROPOSAL TO PROVIDE EXECUTIVE SEARCH SERVICES FOR CITY MANAGER FOR STUART, FL

Volume II: Appendices

Colin Baenziger & Associates

Project Manager and Contact Person:

Colin Baenziger (561) 707-3537
Colin Baenziger & Associates
2055 South Atlantic Avenue • Suite 504
Daytona Beach Shores, FL 32118
e-mail: ***Colin@cb-asso.com***
Fax: (888) 635-2430

…Serving Our Clients with a Personal Touch…

PROPOSAL TO BE THE CITY'S EXECUTIVE RECRUITING FIRM

VOLUME II: APPENDICES

TABLE OF CONTENTS

	PAGE
APPENDIX A: ALL GOVERNMENTAL SEARCH ASSIGNMENTS	**A-1**
APPENDIX B: SAMPLE RECRUITMENT BROCHURE	**B-1**
APPENDIX C: SAMPLE CANDIDATE REPORT	**C-1**
APPENDIX D: SAMPLE SURVEY	**D-1**
APPENDIX E: RESOLUTION OF ST. JOHNS COUNTY, FL	**E-1**
APPENDIX F: CB&A'S VETTING PROCESS FROM DALE MARTIN	**F-1**

Appendix A

Searches by
Colin Baenziger & Associate' Staff

Governmental Search Assignments

Performed by the Staff of Colin Baenziger & Associates

Current Searches

City Manager, Auburn, AL (population 58,582)
City Manager, Burien, WA (population 55,188)
City Manager, Doraville, GA (population 10,896)
City Manager, Parkland, FL (population 30,177)
City Manager, Petersburg, VA (population 32,701)
City Manager, Roanoke, VA (population 98,465)
City Manager, Tacoma, WA (population 205,159)
Assistant City Manager, Weston, FL (population 66,256)
Assistant City Manager, Petersburg, VA (population 32,701)

Finance Director, Petersburg, VA (population 32,701)
Growth Management Director, Collier County, FL (population 357,305)
Police Chief, Petersburg, VA (population 32,701)
Police Chief, Winchester, VA (population 27,216)
Utilities Manager, Deerfield Beach, FL (population 78,041)
Utilities Director, Panama City, FL (population 38,286)

Completed Searches in 2017

City Manager, Fairborn, OH (population 33,200)
Economic Development Director, Concord, NH (population 42,444)
Fire District Attorney, St. Lucie County Fire District, FL
Information Services Director, Cooper City, FL (population 33,382)
Libraries and Information Services Director, Newport News, VA (population 183,000)
Parks and Recreation Director, Deerfield Beach, FL (population 78,041)
Waterworks Director, Newport News, VA (population 183,000)

Governmental Search Assignments (continued)

Completed Searches Prior to 2017

City/Town/Village Manager/Administrator

City Manager, Alachua, FL (population 6,200) in 2001
City Manager, Albany, GA (population 75,600) in 2011
City Manager, Ankeny, IA (population 45,600) in 2013
City Manager, Ashland, KY (population 21,000) in 2013
Village Manager, Bal Harbour, FL (population 3,300) in 2013
City Manager, Bartow, FL (population 16,000) in 2007
Town Manager, Bay Harbor Islands, FL (population 5,200) in 2003 and 2007
City Manager, Bellevue, WA (population 122,400) in 2014
Town Manager, Buckeye, AZ (population 32,000) in 2006
City Manager, Cape Canaveral, FL (population 10,200) in 2010
City Manager, Cape Coral, FL (population 154,300) in 2012
City Manager, Casselberry, FL (population 25,000), in 2005
City Manager, Chamblee, GA (population 17,000) in 2011
City Manager, Cocoa Beach, FL (population 11,200) in 2012, 2015 and 2016
City Administrator, Connell, WA (population 4,200) in 2014
City Manager, Cooper City, FL (population 32,000) in 2008
City Manager, Coral Gables. FL (population 43,000) in 2009
City Manager, Cottonwood Heights, UT (population 34,000) in 2004
City Manager, Covington, VA (population 5,802) in 2016
Town Manager, Cutler Bay, FL (population 35,000) in 2006
City Manager, Dania Beach, FL (population 28,000) in 2009
City Manager, Danville, VA (population 43,000) in 2016
City Manager, Daytona Beach, FL (population 65,000) in 2002
City Manager, Delray Beach, FL (population 64,100) in 2014
City Manager, Deltona, FL (population 83,000) in 2006 and 2008
City Manager, Destin, FL (population 12,000) in 2003 and 2011
City Manager, Doral, FL (population 24,000), in 2004
City Manager, Doraville, GA (population 8,500) in 2013
Town Manager, Dundee, FL (population 3,000) in 2006 and 2009
City Manager, Ellensburg, WA (population 18,350) in 2014
City Manager, Elmira, NY (population 29,200) in 2014
Village Manager, Estero, FL (population 26,600) in 2015
City Manager, Fayetteville, NC (population 208,000) in 2012
City Manager, Fernandina Beach, FL (population 11,000) in 2006 and 2015
City Manager, Fife, WA (population 8,700) in 2010
City Manager, Fort Myers, FL (population 68,190) in 2016
Town Manager, Fort Myers Beach, FL (population 6,900) in 2006 and 2008
City Manager, Fort Pierce, FL (population 41,900) in 2012
City Manager, Fort Smith, AR (population 87,650) in 2016
City Manager, Fruitland Park, FL (population 4,100) in 2013

City/Town/Village Manager/Administrator (continued)

Village Manager, Islamorada, Village of Islands, FL (population 7,500) in 1999 and 2005
City Manager, Gainesville, FL (population 117,000) in 2016
City Manager, Greensboro, NC (population 259,000) in 2009
City Manager, Hallandale Beach, FL (population 39,000) in 2010 and 2012
City Manager, Holly Hill, FL (population 13,000) in 2008 (partial search)
City Manager, Homestead, FL (population 62,000) in 2010
City Manager, Indianola, IA (population 15,108) in 2015
Town Manager, Juno Beach, FL (population 3,600) in 2005
Village Manager, Key Biscayne, FL (population 11,000) in 2007 and 2011
City Manager, Key West, FL (population 24,600) in 2012
Town Manager, Lake Park, FL (population 9,100) in 2001 and 2003
Town Manager, Lantana, FL (population 9,600) in 2000
City Manager, Lake Worth, FL (population 37,000) in 2003 and 2007
City Manager, Lauderdale Lakes, FL (population 32,000) in 1998 and 2002
City Manager, Leesburg, FL (population 20,390) in 2013
City Manager, Madeira Beach, FL (population 12,300) in 2011
Town Manager, Mangonia Park, FL (population 1,400) in 2001
City Manager, Marathon, FL (population 11,500 in 2002 and 2004
City Manager, Marco Island, FL (population 15,000) in 2014
City Manager, Medina, WA (population 3,000) in 2013
City Manager, Melbourne, FL (population 72,500) in 2002 and 2012
City Manager, Miami Gardens, FL (population 101,000) in 2004
City Manager, Mill Creek, WA (18,828) in 2015
City Manager, Miramar, FL (population 122,000) in 2013
City Manager, Monroe, NC (population 33,500) in 2013
City Manager, Mount Dora, FL (population 12,000) in 2005
City Manager, Mount Pleasant, MI (population 26,000) in 2014
City Manager, Mountlake Terrace, WA (population 20,700) in 2014 and 2016
City Manager, New Smyrna Beach, FL (population 23,000) in 2009
City Manager, Normandy Park, WA (population 6,335) in 2013 and 2015
City Manager, North Miami, FL (population 62,000) in 2010 and 2014
Village Manager, North Palm Beach, FL (population 12,500) in 2004, 2005, 2007 and 2012
City Manager, North Port, FL (population 55,800) in 2011
City Manager, Norwich, CT (population 40,500) in 2016
City Manager, Oakland Park, FL (population 42,800) in 2014
City Manager, Ocala, FL (population 52,000) in 2008 and 2015
City Manager, Orange City, FL (population 10,000) in 2010 and 2016
City Manager, Orange Park, FL (population 9,100) in 2010
City Manager, Oviedo, FL (population 33,000) in 2008
City Manager, Palm Bay, FL (current population 101,000) in 2002 and 2015
City Manager, Palm Coast, FL (population 71,000) in 2006
Village Manager, Palmetto Bay, FL (population 24,000) in 2003
City Manager, Panama City Beach, FL (population 12,018) in 2012

City/Town/Village Manager/Administrator (continued)

Village Manager, Pinecrest, FL (population 19,300) in 2011
City Manager, Pompano Beach, FL (population 101,000) in 2007
City Manager, Port St. Lucie, FL (population 174,100) in 2016
City Manager, Portland, ME (population 65,000) in 2011
City Manager, Prosser, WA (population 5,802) in 2016
City Manager, Riviera Beach, FL (population 37,000) in 2009
City Manager, Roanoke, VA (population 96,000) in 2009
City Manager, Sarasota, FL (population 55,000) in 2012
City Manager, Satellite Beach, FL (population 10,100) in 2013
City Manager, Savannah, GA (population 142,800) in 2016
City Manager, Scottsdale, AZ (population 217,400) in 2013 in 2013
City Manager, Seminole, FL (population 17,800) in 2015
City Manager, Sequim, WA (population 6,700) in 2015
Town Manager, Sewall's Point, FL (population 2,000) in 2006
Township Manager, Springettsbury Township, PA (population 26,700) in 2014 and 2016
City Manager, St. Pete Beach, FL (population 10,000) in 2014
City Manager, Stuart, FL (population 17,000) in 2006
City Manager, Sunny Isles Beach, FL (population 17,000) in 2006 and 2011
City Manager, Sunrise, FL (population 84,400) in 2012
City Manager, Sunnyside, WA (population 15,860) in 2013
Town Manager, Surfside, FL (population 6,000) in 2014
City Manager, Tacoma, WA (population 200,000) in 2011
City Administrator, Tavares, FL (population 11,000) in 2006
City Manager, Titusville, FL (population 43,940) in 2014
City Manager, West Melbourne, FL (population 15,000) in 2009
City Manager, West Park, FL (population 12,000) in 2005 and 2010
City Manager, Winchester, VA (population 26,000) in 2014
City Manager, Yakima, WA (population 91,000) in 2011 and 2012

County Administrator / Manager - Completed Searches

County Manager, Alachua County, FL (population 251,400) in 2014
County Manager, Baker County, FL (population 27,000) in 2006
County Administrator, Bay County, FL (population 158,000) in 2005
County Manager, Brevard County, FL (population 536,000) in 2009
County Administrator, Broward County, FL (population 1,800,000) in 2006
County Administrator, Clackamas County, OR (population 383,900) in 2013
County Administrator, Clay County, FL (population 160,000) in 2005 and 2011
Chief Administrator, El Paso County, TX (population 827,700) in 2014 and 2016
County Administrator, Emmet County, MI (population 32,900) in 2014
County Manager, Flagler County, FL (population (83,000) in 2007
County Manager, Fulton County, GA, (partial search) in 2015 (population 894,300) in 2015
County Administrator, Hernando County, FL (population 172,800) in 2012

County Administrator / Manager - Completed Searches (continued)

County Administrator, Highlands County, FL (population 98,000) in 2008
County Administrator, James City County, VA (population 69,000) in 2014
County Administrator, Martin County, FL (population 140,000) in 2005
Borough Manager, Matanuska-Susitna Borough, AK (population 85,000) in 2011
County Administrator, Monroe County, FL (population 80,000) in 2004
County Administrator, Nassau County, FL (population 60,000) in 2004
County Administrator, Okaloosa County, FL (population 183,500) in 2013
County Administrator, Okeechobee County, FL (population 39,000) in 2008
County Manager, Osceola County, FL (population 235,000) in 2003 and 2007
County Administrator, Polk County, IA (population 400,000) in 2007 and 2011
County Manager, Seminole County, FL (population 410,000) in 2006
County Administrator, St. Johns County, FL (population 162,000) in 2007
County Administrator, St. Lucie County, FL (population 284,000) in 2014
County Manager, Union County, NC (population 198,600) in 2010
County Administrator, York County, VA (population 66,269) in 2015

Completed Searches – Assistant/Deputy Managers

Assistant City Manager / Operations, Corpus Christi, TX (population 308,000) in 2013
Assistant City Manager / Utilities, Corpus Christi, TX (population 308,000) in 2014
Deputy City Manager, Danville, VA (43,000) in 2016
Deputy City Administrator, Dickinson, ND (population 22,300) in 2016
Deputy City Manager for Community Building, Durham, NC (population 220,000) in 2009
Assistant Town Manager, Jupiter Island, FL (population 654) in 2010
Assistant Village Manager, Islamorada, Village of Islands, FL (population 7,500) in 1998
Assistant City Manager, Lake Worth, FL (population 37,000) in 2004
Assistant County Administrator, Martin County, FL (population 140,000) in 2006
Deputy City Manager, Sammamish, WA (60,000) in 2016
Assistant City Manager, Tamarac, FL (population 55,500) in 2001
Assistant City Manager, West Palm Beach, FL (population 101,000) in 2004 and 2013

Completed Searches – City or County Attorneys

County Attorney, Clay County, FL (population 196,400) in 2016
City Attorney, Daytona Beach, FL (62,300) in 2016
City Attorney, Fort Pierce, FL (population 41,590) in 2016
County Attorney, Fulton County, GA (population 996,319) in 2015
City Attorney, Port St. Lucie, FL (population 174,100) in 2016
County Attorney, Prince William County, VA (population 438,580) in 2015
City Attorney, Roanoke, VA (population 96,000) in 2012
City Attorney, West Melbourne, FL (population 15,000) in 2008

Completed Searches – Community Development/Growth Management/Planning

Growth Management Director, Collier County, FL (population 328,000) in 2015
Community Development Director, Danville, VA (population 43,000) in 2016
Director, Building and Development, Loudoun County, VA (population 336,900) in 2014
Community Development Director, Miami, FL (population 408,000) in 2008
Director of Planning, Building and Development, Roanoke, VA (population 96,000) in 2012
General Manager, North Sarasota Redevelopment District, Sarasota (population 53,000) in 2008
Growth Management Director, St. Lucie County, FL (population 261,000) in 2005
Community Development Director, Tamarac, FL (population 55,500) in 2007
Growth Management Manager, Wellington, FL (population 55,000) in 2009

Completed Searches – Economic Development / Redevelopment

Executive Director, Camden County (GA) Joint Development Authority (pop. 51,400) in 2014
Economic Development Director, Collier County, FL (population 328,000) in 2012
Assistant City Manager for Community Building, Durham, NC (population 220,000) in 2009
Economic Development Director, Roanoke, VA (population 96,000) in 2012
Director, Office of Economic & Workforce Development, Durham, NC (pop. 220,000), 2009
Economic Development Director, Loudoun County, VA (population 326,000) in 2010
Economic Development Director, St. Johns County, FL (population 162,000) in 2011

Completed Searches – Engineers

City Engineer, Gulfport, MS (population 90,000) in 2008
Director/Engineering/Public Works /Utilities, Hallandale Beach, FL (population 39,000) 2013
Deputy County Engineer, Martin County, FL (population 140,000) in 2006
Assistant City Engineer, Melbourne, FL (population 75,000) in 2008
City Engineer, Sunny Isles Beach, FL (population 17,000) in 2006
Staff Engineer, Wellington, FL (population 55,000) in 2009

Completed Searches – Facilities Management

Director, Performing Arts & Convention Center, Federal Way, WA (population 92.700) in 2015
Director, Landscaping, Weston, FL (population 65,300) in 2013

Completed Searches – Finance and Budget

Finance Director, Altus, OK (population 19,800) (background check) in 2012
Finance Director, College Park, MD (population 32,256) in 2016
Procurement Director, Collier County, FL (population 357,305) in 2016
Finance Director, Danville, VA (population 43,000) in 2014
Finance Director, Daytona Beach, FL (population 31,860) in 2012
Finance Director, DeLand, FL (population 28,230) in 2016
Finance Director, Escambia County Housing Authority (population served: 302,700) in 2014

Completed Searches – Finance and Budget (continued)

Finance Director, Fort Walton Beach, FL (population 20,000) in 2006
Director, Management & Financial Services, Loudoun County, VA (population 326,000) in 2012
Manager, Office of Management and Budget, Lake Worth, FL (population 37,000) in 2010
Finance Director, Lauderdale Lakes (population 32,000) in 1998
Finance Director, Miami, FL (population 408,000) in 2013
Finance Director, Miramar, FL (population 130,300) in 2016
Treasurer, Miami, FL (population (408,000) in 2013
Finance Director, Oregon City, OR (population 31,860) in 2012
Finance Director, Roanoke, VA (population 99,000) in 2014
Director of Finance and Administration, Roanoke Regional Airport, Roanoke, VA, in 2014
Budget Director, St. Petersburg, FL (population 248,000) in 2009
Finance Director, St. Petersburg, FL (population 248,000) in 2010
Finance Director, Sunny Isles Beach, FL (population 17,000) in 2010
Finance Director, Surfside, FL (population 5,700) in 2012
Finance Director, Tamarac, FL (population 55,500) in 2005 and 2009
Finance Director, West Palm Beach, FL (population 101,000) in 2007

Completed Searches – Fire/EMS/Dispatch

Fire Chief, Cape Coral, FL (population 154,300) in 2013
Fire Chief, Lauderdale Lakes, FL (population 32,000) in 1999
Executive Director, South Sound 911 (serves a population of 808,000), Tacoma, WA, in 2013
Fire Chief, West Palm Beach, FL (population 101,000) in 2005

Completed Searches – General Services / Administration

General Services Director, Loudoun County, VA (population 349,700) in 2015

Completed Searches – Housing/Building

Building Official, Jupiter Island, FL (population 580) in 2005 and 2010
Building Official, Miami Beach, FL (population 91,000) in 2005
Building Official, Jupiter Island, FL (population 580) in 2005 and 2011
Building Official, Miami Beach, FL (population 91,000) in 2005
Building Official, Sewall's Point, FL (population 2,000) in 2006
Building Official, Tamarac (population 55,000) in 2008

Completed Searches – Human Resources

Human Resources Director, Boca Raton, FL (population 84,000) in 2006
Human Resources Director, Cape Coral, FL (population 154,300) in 2013
Director, Human Resources, Gainesville, FL (population 125,000) in 2014
Director of Personnel, Fulton County, GA (population 992,000) in 2010
Director, Human Resources, Hillsborough County, FL (population 1,292,000) in 2015
Human Resources Office, Loudoun County, VA (population 326,000) in 2011
Human Resources Administrator, Martin County, FL (population 140,000) in 2007
Personnel Director, North Miami, FL (population 56,000) in 2001
Director, Human Resources, Sunrise, FL (population 88,800) in 2015
Director, Human Resources, Roanoke, VA (population 99,000) in 2014
Personnel Director, Vero Beach, FL (population 17,900) in 2003
Human Resources Director, West Palm Beach, FL (101,900) in 2013 and 2014

Completed Searches – Health and Human Services

Director, Health and Human Services, St. Johns County, FL (population 162,000) in 2010

Completed Searches – Information Technology

Information Services Director, Lauderdale Lakes, FL (population 32,000) in 1998
Information Services Director, Palm Beach County Tax Collector (population 1,300,000) in 2012 (partial search)
Chief Information Officer, Weston, FL (population 65,300) in 2015

Completed Searches – Parks/Recreation/Libraries

Director, Parks, Recreation, & Conservation, Hillsborough County, FL (pop. 1,292,000) in 2015
Director, Parks and Recreation, Hobbs, NM (population (35,000) in 2014
District Manager, Holiday Park Recreation District (population 1,400) in 2007
Library Services Director, St. Johns County, FL (population 162,000) in 2007
Director, Parks and Recreation, West Palm Beach, FL (population 101,000) in 2006

Completed Searches – Police

Police Chief, Golden Beach, FL (population 355) in 2011 (partial search)
Police Chief, Farmington, NM (population 45,900) in 2014
Police Chief, Lauderhill, FL (population 66,900) in 2011 (partial search)
Police Chief, Melbourne, FL (population 76,000) in 2011 (partial search)
Chief of Police, Mooresville, NC (population 35,300) in 2016
Director of Administration – Public Safety, Ocean Reef Community Association in 2016
Police Chief, Sewall's Point, FL (population 2,000) in 2007
Police Chief, St. Augustine Beach, FL (population 6,200) in 2012
Police Chief, Sunny Isles Beach, FL (population 17,000) in 2010

Completed Searches – Public Works

Public Works Director, Aventura, FL (population 37,200) in 2016
Public Works Director, Chandler, AZ (population 250,000) in 2007
Public Works Director, Fort Lauderdale, FL (population 183,000) in 2004
Vice President, Public Works & Operations, Ocean Reef Community Association (population 2,000), Key Largo, FL, in 2001
Executive Director, Environment and Infrastructure, Pinellas County, FL (pop. 917,000) in 2012
Public Works Director, Sammamish, WA (60,000) in 2016
Director/Capital Projects Manager/City Engineer, Sunny Isles Beach, FL (pop. 17,000) in 2007
Assistant Public Works Director, Sumter County, FL (107,000) in 2015
Assistant Public Works Director, Sunny Isles Beach, FL (population 17,000) in 2008
Public Works Director, Tamarac, FL (population 55,500) in 2003
Solid Waste Director, Tampa, FL (population 335,700) in 2014
Director, Landscaping, Weston, FL (population 65,300) in 2013

Completed Searches – Utilities

Water Resources Director, Asheville, NC (population 87,200) in 2015
Utility Director, Danville, VA (population 43,000) in 2015
Power & Light Division Director, Danville, VA (population 43,000) in 2015
Water and Gas Director, Danville, VA (population 43,000) in 2016
Executive Director, Des Moines (IA) Water Works (serves a population of over 500,000) in 2012
Executive Director, Florida Keys Aqueduct Authority, Key West, FL (pop. 90,000) in 2003
Executive Director, Onslow Water & Sewer Authority (Jacksonville, NC) (pop. 160,000) in 2009
Executive Director, Sewerage and Water Board of New Orleans (population 369,000)
General Manager, Tampa Bay Water (population served 2,400,000) in 2008
Utilities Director, Lake Worth, FL (population 37,000) in 2009
Utilities Director, Palm Bay, FL (population 101,000) in 2005
Executive Director, Environment and Infrastructure, Pinellas County, FL (pop. 917,000) in 2012
Director, South Martin Regional Utilities (population 22,000) in 2013
Water (Wastewater) Resources Director, St. Petersburg, FL (population 248,000) in 2008
Watershed Management (Water and Wastewater) Director, DeKalb County, GA (population 691,900) in 2011 and 2013

Completed Searches – Work Force Management

Director, Office of Economic & Workforce Development, Durham, NC (pop. on 220,000), 2009

Completed Searches – Other

Chief Executive Officer, Chatham Area Transit, Savannah, GA (population served 286,900) in 2016
Chief Operating Officer, Amelia Island Plantation Community Association (population 3,000) in 2016
City Clerk, Lauderdale Lakes (population 32,000) in 1998
Director, Registrations and Elections, Fulton County, GA (population 992,000) in 2009
Environmental Resources Director, St. Lucie County, FL (population 261,000) in 2009
Executive Director, Lakewood Ranch Inter-District Authority (population 15,000) in 2011
Executive Director, Northern Palm Beach Improvement District, Palm Beach Gardens, FL (population 200,000) in 2003
Executive Director, Sun City Summerlin Home Owners Association, Las Vegas, NV (population 14,000) in 2015
General Manager, Chittenden Solid Waste District, Williston, VT (population 157,461) in 2016
General Manager, Holiday Park Recreation District, FL (population 4,500) in 2007
Special Projects Coordinator, Islamorada, Village of Islands, FL (population 7,500) in 1998

Appendix B

Sample Brochure:
City Manager Search
Port St. Lucie, FL

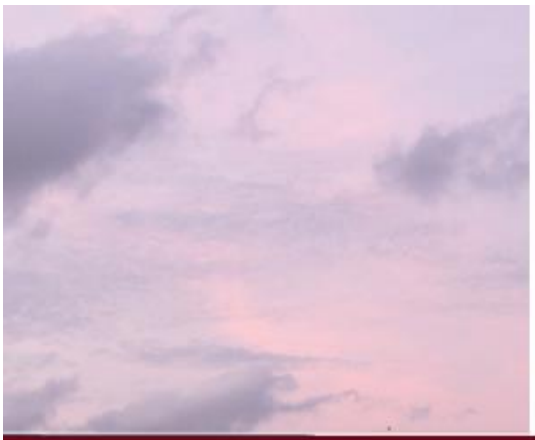

Welcome to the City of Port St. Lucie, FL

City Manager Position Available - Apply by August 29, 2016

Estimated 2016 Population: 178,590

Welcome to Port St. Lucie, Florida's eighth largest city by population and third largest in land area. Located in the heart of Florida's Treasure Coast, Port St. Lucie is situated in the southern part of St. Lucie County. The breathtaking beaches of Hutchinson Island lay just to the east, Fort Pierce just to the northeast and the major metropolitan areas of Palm Beach, Fort Lauderdale and Orlando are all relatively close. Both Interstate-95 and Florida's Turnpike are easily accessible to the city, and five major airports and four major cruise ports lie within a few hours.

Port St. Lucie is a city on the rise. People are moving to Port St. Lucie in droves. The streets are bustling again. Employment is higher. In its 2015 Best-Performing Cities study, the Milken Institute found it to be the country's biggest gainer in its job

growth ranking among large MSAs. Property values are climbing. And it has been noticed. In the last year, WalletHub.com ranked it the 7th Best Place to Retire in the US. Investor's Business Daily named it the 2nd hottest housing market in the US. Bloomberg Business selected it as one of the top cities for economic growth. Forbes.com named Port St. Lucie as one of the top ten cities in the US for job growth. Expedia.com ranked it the 14th most comfortable place for a hotel stay. FlipKey called the city a Top Trending Vacation Rental Destination. And, just last week, the city learned that 24/7 Wall Street, after studying 550 US cities with a population of 65,000 or more, concluded that Port St. Lucie was one of America's 50 Best cities to Live In. According to SmartAsset, a New York financial technology company, Port St. Lucie has the highest millennial homeownership rate in the country which makes its future even brighter.

The reasons for the recent acclaim are many. First, the area perfectly pairs the excitement of a major city with an assortment of cultural and recreational/leisure activities nearby. There is literally something here or nearby for everyone! Stroll through commercial areas while admiring exclusive artwork or attend a play at the Pineapple Playhouse (home to the St. Lucie County Community Theater). Enjoy a concert, musical or comedy show at the historic Sunrise Theatre in neighboring Fort Pierce, which first opened its doors in 1923. Discover the only museum dedicated to the US Navy SEALs (located on the same grounds where they first trained as "frogmen" during WWII) and ancient Indian mounds predating Columbus by several hundred years.

Golf enthusiasts will find award-winning golf courses, including the one-of-a-kind PGA Village, which includes a Historical Center, that documents golf's history. In all, the county has more than 300 holes of championship golf. Baseball fans will be delighted to enjoy America's favorite pastime at Tradition Field—

spring training home of the New York Mets and summer home of the minor league St. Lucie Mets.

You'll marvel at and enjoy the raw nature of the area, which St. Lucie's city and county governments and citizens are dedicated to protecting. Take a nap on the area's nearly 21 miles of unspoiled beaches, dive among shipwrecks, paddle through lush rivers, or head offshore to snag trophy sized sailfish, tuna, swordfish, and wahoo.

Savannas Preserve State Park offers opportunities for nature observation and recreation, such as swimming, kayaking, riding horses, bird watching, launching your own boat, picnicking and camping. The Park's environmental educational center offers opportunities to study the large number of exotic birds, and local wildlife (such as reptiles, dolphins, manatees, and other marine life). You'll discover abundant marine life in the Indian River Lagoon, home to over 4,000 species of plants and animals and a breeding ground for game fish. It is the most biologically diverse estuary in the country! The area also boasts Port St. Lucie Botanical Gardens and the Heathcote Botanical Gardens in Fort Pierce, which exhibits the largest public display of tropical bonsai trees in the United States.

Port St. Lucie is a great place to raise a family. It is and has historically been a very safe city. NeighborhoodScout.com states the city's crime rate to be one of the lowest in the nation for cities with a similar population. While housing prices have increased 19% from December 2014 to December 2015, buyers can still get excellent value for their money. Schools are very strong and the city is home to one of the best combination of public education, higher education consortiums and research centers in the southeast region of the United States. St. Lucie County has 24 distinguished five-star schools and 34 golden schools -- awards given for community involvement. The schools also have been named as among the Top 100 wired schools for outstanding technology and among the best in the nation by Newsweek. In, or near the city, you will find the highly regarded Indian River State College, the Smithsonian Marine Station, the Manatee Observation and Education Center, and the Harbor Branch Oceanographic Institution of Florida Atlantic University. Best of all, the City has great neighborhoods. The people are friendly and neighbors help their neighbor. In spite of its size, many residents brag about its small town feel and they want to protect it.

If you want more, Port St. Lucie is within a 2 hour drive of South and Central Florida and within a 3.5 hour drive of all of Florida's greatest population centers. West Palm Beach is 45 minutes south with Fort Lauderdale being 45 minutes further. Miami lies two hours south and Tampa 2.5 hours west. Both Interstate-95 and Florida's Turnpike serve as gateways. Daytona Beach and Jacksonville are just over 2 and 3 hours north respectively.

Port St. Lucie is seeking an experienced City Manager to lead the city to the next level, and someone who wants to live the good life. Come delight in the combination of rich history, nearby natural beauty and the excitement of a city truly on the move!

HISTORY

In 1715, a Spanish galleon fleet, full of treasure sank in a hurricane off the east coast of Florida. Since that time, the region has been known as the Treasure Coast, and the area has become an underwater archeological preserve. St. Lucie County was created in 1844 and as late as the 1950s what was to become Port St. Lucie was a largely uninhabited tract of land composed of a fishing camp, a few farms and some businesses.

In 1958, with a budget of $50 million, the General Development Corporation (GDC) purchased over 40,000 acres along the North Fork of the St. Lucie River. Its plan here and in several other Florida communities was to purchase huge tracts of land, subdivide the land into lots and sell the lots, primarily to northerners excited about retiring to Florida.

In 1960 GDC became involved in a dispute over road construction with the County and convinced the state legislature to incorporate the area into the City of Port St. Lucie. By 1970, the City's population was 330. In 1980, the population was 14,690 and the City's incredible growth was underway.

In the mid-1980s, the Thomas J. White Development Company acquired and began planning what would become St. Lucie West. Originally, the area was to have

contained about 14,000 homes over a 20-year period on 7 square miles. After realizing the community's strategic position along I-95 and the Florida Turnpike, the developer then added business sectors and places of entertainment. In 1990 the population was a little over 56,000 and by 2000, the population had jumped to 88,769.

In the next ten years growth accelerated even faster. In 2006, the Tradition development was started and was to be built around a commercial area, with room for over 18,000 residences. Tradition is the largest fully entitled residential development area from the tip of Interstate 95 to the Canadian border, and is modeled after a 1950's-era town. Tradition Square, the town center of the community, holds festivities year-round. It was also chosen as the site of HGTV's Green Home 2009, and one of America's best 100 communities.

In 2007, the housing market began to collapse and unemployment started to rise. In February 2009, unemployment was at 10½ percent and in 2008, nearly 11,000 homes went into foreclosure.

In 2008, Tradition and Core Communities welcomed the Florida Center of Innovation, a research laboratory and campus. The key components were to be two biotech and life science companies, the Torrey Pines Institute for Molecular Studies and the Vaccine & Gene Therapy Institute. The hope was they would bring, along with the companies that followed, more than 30,000 jobs. Unfortunately not all went well, and while Torrey Pines is still operational, VGTI is bankrupt and has left the City with a large debt. The City had a similar, unfortunate experience with Digital Domain, a movie making company with much promise but limited results.

In 2010, the City's population was 164,603 and build-out population is expected to be approximately 400,000.

Table 1: Port St. Lucie Demographics

2016 Estimated Population: 179,590			
Distribution by Race		Distribution by Age	
Caucasian	76.4%	0 to 18	24%
African American	14.8%	18 to 24	6%
Asian	1.9%	25 to 44	28%
Some Other Race	4.2%	45 to 64	23%
Two or More Races	2.8%	65 and Older	19%

Ethnicity		Median Age	
Hispanic-All Races	30.8%	Port St. Lucie	40.2
All Other Races	69.2%	U.S.	37.4

Educational Achievement (*over age 25*)	
High School or Higher	87.8%
Bachelor's Degree or Higher	19.0%

Income	
Median Household Income	$48,898
Mean Household Income	$68,152
Percent Below Poverty Level	5.5%

Source: City of Port St. Lucie and the U.S. Census

DEMOGRAPHICS

The current population of Port St. Lucie is 178,590. It composes 60% of the population of St. Lucie County and 30% of the population of the Treasure Coast. Table I provides specific demographic data for the city.

CLIMATE

Port St. Lucie features a warm humid subtropical climate, falling just short of having a true tropical climate. Summers are usually hot, with the high temperatures averaging in the low 90s and the average low temperature being in the low 70s. Winters are usually mild to warm, with average high temperatures being in the mid-70s and the lows averaging in the low 50s. The average yearly precipitation is around 53.5 inches.

The hurricane season is between June 1 and November 30 with major hurricanes most likely in September and October. Although Hurricanes Francis and Jeanne struck Port St. Lucie directly in 2004, tropical storms are not a regular occurrence and very few result in serious injury although property damage can be significant.

GEOGRAPHY

Port St. Lucie is located on the east coast of Florida about 120 miles southeast of Orlando and about 115 miles north of Miami. The city covers 120.4 square miles. The elevation is 20 feet above sea level and the terrain is flat. The population density is 2,264 people per square mile. Port St. Lucie forms part of a metropolitan area called the Port St. Lucie, Florida Metropolitan Statistical Area that in 2013 was estimated to have 438,095 residents.

COMMERCE

St. Lucie County is home to some cutting edge technology and economic growth. It has a number of banks, law firms and medical facilities. Table 2 on page 6 provides some additional information.

From December 2014 to December 2015, single family home sales prices increased by 19%, and unemployment is down approximately 1% to 5.1%

THE GOVERNMENT

Port St. Lucie is a full service city led by a five-member elected Council and operates under the Council-Manager form of government. Each Council member, including the Mayor, has one vote so legislative authority is spread equally among all five members. The Mayor is elected at-large and while the City Council Members must live in the geographic district they represent, every registered voter in the city is eligible to vote for them. There are no term limits for any City Council seat. The next election is in November when three seats will be voted on – Districts 2

Table 2: Principal Employers

Employer	Function	Employees
St. Lucie School Board	Education	5,273
Walmart Retail and Distribution	Retail	2,253
Lawnwood/HCA Medical	Healthcare	2,189
Indian River State College	Education	1,996
St. Lucie County	Government	1,671
Publix	Grocery	1,466
City of Port St. Lucie	Government	988
Convey Health Solutions	Healthcare	950
Liberty Healthcare Group, Inc.	Healthcare	920

Source: Port St. Lucie 2015 CAFR

and 4 as well as District 1 where the member is running for the County Commission. The District 2 Council Member is not planning to run and the District 4 Council Member has not declared his intentions. Thus, the Council will have at least two new members.

The role of the Mayor and Council are to set policy and determine the long-term vision for the city. They are united in achieving a shared vision for the City they all love. They may disagree on individual issues but their hearts are all set on doing what is best for their community. Their Vision for 2030 is to be "the Safe; Beautiful; and Friendly City for All Ages." It will become even more desirable by enhancing its great neighborhoods; providing top quality educational opportunities for lifelong learning; having a diverse economy and job base; providing convenient mobility options; and wonderful leisure opportunities for an active lifestyle. And they have a strategic plan to make it happen.

To support the Council and ensure the smooth functioning of the government, it appoints a City Manager to handle the city's day-to-day business affairs and a City Attorney to provide legal advice.

For FY 2015-2016, the City's general fund budget is $100,964,572 and its total budget is $559,369,153. Overall, the City has slightly over 1000 employees. The largest components are police with approximately 35% of the total, utilities with 25% and general government and culture and recreation, both with 11%. Fire service is provided by a separate fire district that covers all of St. Lucie County (including the cities of Fort Pierce and Port St. Lucie). The City has three unions representing six bargaining units. These are: the Federation of Public Employees representing General Employees, the Office and Professional Employees International Union representing professionals and supervisors, and the International Union of Police Associations, AFL-CIO, representing separate bargaining units for police officers, sergeants and lieutenants.

OPPORTUNITIES / CHALLENGES

Port St. Lucie has gone from a small town to becoming a big city very, very quickly while retaining its character as a home town and a great place to raise a family. Residents are generally well pleased with the services they receive and the City is on a path to be a best in class city. It has challenges, as does every other city, but they are manageable.

The first notable challenge is the cost of its infrastructure debt. When the original developer filed for bankruptcy, the City's utility served only a limited portion of the community and certainly could not support a city with a build-out population of 400,000. Recognizing the absolute need for a city-wide utility, the City embarked on a significant expansion and incurred a significant amount of debt in the process. Further, Port St. Lucie was originally envisioned as a large retirement community without a commercial / industrial sector. In an effort to jumpstart this sector and provide jobs, the City invested a great deal of money in the aforementioned infrastructure to support Torrey Pines, VGTI and Digital Domain. It also provided the infrastructure for a City Center. Unfortunately, all have faltered leaving the City with a large but manageable debt. It does, however, mean that the City must be very careful in how it spends its funds. It will be incumbent on the new manager to work diligently to maintain the current high

level of services that the residents enjoy while always seeking ways for the City to become more efficient and effective.

The second challenge will be to help provide stability to the organization. Last June the current City Manager of three years announced his resignation effective December 31st. After having one City Manager for 20 years, it has had three since. Last February, the City Attorney was asked to leave after approximately 20 months. She also had succeeded a City Attorney who stayed for approximately 20 years. Additionally, as noted the fall elections will bring at least two new members to the City Council. The City government is extremely interested in returning to its prior stability.

The City has a strategic plan and the third challenge will be to continue to implement that plan and the projects it calls for. One example is the Crosstown Expressway which will provide significant relief to commuters and anyone else traveling east-west. Years of legal battles have recently been resolved and funding has been set aside so it is now time to push the project forward.

THE IDEAL CANDIDATE

The City Council is looking for an outstanding leader and manager – someone who is hardworking, extremely energetic and relentlessly positive. This is not a retirement job! The environment is fast paced and the Council is active!

The ideal candidate will be someone who will partner with the elected officials and staff to solve problems while also being a supportive and trusted advisor. The City Manager will give all members of the Council the same information and keep them all equally well informed. He/she will understand politics and how to navigate them without becoming involved in them. The individual will be values driven, someone whose

honesty, integrity and sincerity are above reproach. He/she will believe strongly in transparency (to the maximum degree possible) and promote the public's right to know.

The ideal candidate will be someone who is humble but has a great deal of self-confidence. The individual will be strong but diplomatic and able to speak truth to power. The City has its share of strong personalities but they expect to be told what they need to hear, not what they might want to hear. Sometimes that will mean saying no but just saying no is not enough. The Manager will need to present a well-reasoned rationale and ideally, another sensible approach to achieve the elected officials' goals. He/she will need to build credibility through listening, action, and admitting mistakes.

The individual will be responsive and well-studied, generally already knowing the answer to questions that are posed. When he/she does not know the answer, he/she will say so and, after appropriate research, provide the correct answer promptly. He/she will be a people person with outstanding communications and interpersonal skills. Port St. Lucie is a friendly place and the Manager must be comfortable regularly interacting with a wide variety of people from different backgrounds. The ideal candidate will also be able communicate with individuals from all levels of the community in many different settings. He/she will be very open and approachable. Good listening skills are critical. It will be important that he/she be viewed as cooperative and be able to build consensus both inside and outside the government.

Customer service will be important to the next Manager will ensure a positive, welcoming customer friendly ethos is instilled throughout the government. This area is but one of many where the individual will be expected to lead by example.

The ideal candidate will be a visionary and someone who can see the big picture all the way down to the details. The ideal candidate will understand how to select, motivate and manage staff. The individual will be a mentor and focus on developing staff. He/she will recognize the importance of teamwork, and build a strong, pro-active and dynamic team within the office. The individual will be fair and have a sense of humor. The next manager will value his/her staff, support them and defend them. He/she will not be a micromanager but will have high expectations for the staff, set goals and provide the necessary resources. He/she will then step back and let the managers do their jobs. The individual will, however, monitor progress and hold staff accountable for results.

The next City Manager will possess strong financial and budgeting skills and be a problem solver. When others see road blocks, the individual will see hurdles and find ways to get over or around them. The City wants someone who is analytical and who will explain how to get things done, not that they cannot be done. Simply stated, it will be important for the candidate to always be aggressively seeking solutions. He/she will have sense of urgency and appropriate sense of impatience. The next manager will be reasonable but always pushing to make Port St. Lucie the best city in Florida, if not the United States.

The ideal candidate will have a minimum of ten years of progressively more responsible experience in public or private sector management and at least five years as City Manager or Assistant overseeing the efforts of a minimum of 300 employees and in a comparably sized community. A Bachelor's degree from an accredited college or university, with a major in administration, management or a related field, is required. A Master's degree is preferred.

One final comment is that the best candidate will be someone who recognizes Port St. Lucie for the treasure it is and will stay as the manager for at least five years.

RESIDENCY

Residency within the city limits is not required but very strongly preferred.

COMPENSATION

The salary range for the next City Manager is $170,000 to $225,000. Benefits are excellent.

CONFIDENTIALITY

Under Florida law all applications are public record and subject to disclosure upon receipt. As a practical matter, a

request must be made and most Florida newspapers tend to ignore these searches until the semi-finalists are named. Nonetheless, it is possible the newspaper could request the applications at any time and your name could be published.

HOW TO APPLY

E-mail your cover letter and resume to Recruit28@cb-asso.com by August 29, 2016. Faxed and mailed resumes will not be considered. Questions should be directed to Colin Baenziger of Colin Baenziger & Associates at (561) 707-3537 or David Collier at (772) 260-1858.

THE PROCESS

Applicants will be screened between August 30th and September 26th. Finalist interviews are scheduled for September 30th and October 1st. The selection of the City Manager is anticipated to be made on October 3rd.

OTHER IMPORTANT INFORMATION

The City is an Equal Opportunity Employer and encourages women and minorities to apply. A Veteran's preference will be awarded if applicable under Florida law. Other important information can be found at:

http://www.cityofpsl.com/city-council/pdf/strategic-plan-2015-2020-2030.pdf

http://www.visitstluciefla.com/port_st_lucie.htm

http://stluciechamber.org/

COLIN BAENZIGER & ASSOCIATES
EXECUTIVE RECRUITING

Appendix C

Sample Candidate Report

COLIN BAENZIGER & ASSOCIATES

EXECUTIVE RECRUITING

Sample Candidate Report

[Note: The following materials are provided with the permission of the candidate.]

TABLE OF CONTENTS

	PAGE
RESUME	**1**
CB&A INTERVIEW	**5**
BACKGROUND CHECKS	**11**
REFERENCE NOTES	**13**
INTERNET SEARCH	**28**

Christopher Morrill

Resume

Christopher Paul Morrill

201 East 52nd Street ● Savannah, GA 31405 ● 912-231-8711 ● kpicikim@yahoo.com

Experience

Assistant City Manager, City of Savannah, GA (population: 143,000) ***8/01 – Present***

Serve as assistant city manager for management & financial services, leading a full service organization with a staff of 2,600 and annual budget of over $280 million. Represent the City on boards and committees, oversee financial, human resource and strategic planning, directly supervise 12 departments, coordinate major economic development projects, and lead special projects and analyses, including:

- Ellis Square Public/Private partnership which included 1,100 space underground public parking garage supporting a private hotel/condo/retail development, $400 million extension of Savannah's downtown commercial/residential areas, and 4,000 acre traditional neighborhood development;
- Priority based budgeting process that involved over 100 employees in developing the 2010 city service program and budget which was reduced by over $10 million without layoffs, delaying capital maintenance, or across the board cuts.
- Merger of City and County police departments under City management;
- Recruitment and hiring of police chief, fire chief, and assistant city manager for public development;
- Annexations that have increased the size of the City by over 19,000 acres;
- Geographically based 311 customer service/work order system;
- Civic Master Planning process which received the 2009 Charter Award from the Congress of New Urbanism and the 2009 Excellence in Government Finance Award from the Government Finance Officers Association of the United States & Canada
- Local Options Sales Tax negotiations on allocation of over $250 million that must be shared among Chatham County, Savannah and six other municipalities; and,
- G-8 Sea Island Summit public safety and security planning for the diplomats, international press, and activists based in Savannah for the three day Summit in June 2004.

Senior Municipal Finance Advisor, Research Triangle Institute, RTP, NC ***10/99 – 8/01***

Served as resident advisor on local government finance and management for the National Treasury of the Republic of South Africa. This position entailed assisting the National Treasury's chief director of Local Government with developing and implementing a new fiscal framework for municipalities, reforming municipal budgeting systems, and developing the capacity of local government finance officers and systems in post-apartheid South Africa.

Fellow, Kellogg National Leadership Program, ***1997 - 2000***

One of 38 individuals chosen for this national program designed to prepare leaders for the challenges of the 21st century. Fellowship activities included studying conflict resolution and community building in Northern Ireland, South Africa, China, and Peru and studying Spanish in Granada, Spain. Also assisted a group of unemployed women in a former township area outside of Pretoria, South Africa, with developing a chicken breeding facility that was funded through a grant from the Kellogg Foundation.

Research and Budget Director, City of Savannah, GA ***12/94-10/99 & 10/90-10/92***

Led an eight member team in all aspects of preparing and monitoring the annual Service Program and Budget, directing analyses, and coordinating research projects. Prepared the City's five-year financial and capital plans. Coordinated federal and state lobbying efforts. Significant accomplishments during my tenure included:

- 1997 City Budget document rated "Outstanding as an Operations Guide" by the Government Finance Officers Association of the US and Canada;
- Developed long-term financial planning model that resulted in the City taking concrete steps to significantly reduce debt levels and decrease the property tax rate by over 25%; and,
- Created the City's *Incentive Budgeting System* that rewards departments that achieve performance goals and reduce expenditures.

US Peace Corps Volunteer, City of Lviv, Ukraine (population: 850,000) ***12/92 - 10/94***

Served as a management advisor to the Mayor of Lviv. Major accomplishment included implementing Total Quality Management (TQM) in City Administration that reduced the number of steps in the housing privatization process from 23 to 11, and increased the number of applications processed per month from 1,400 to over 4,000. This accomplishment was featured in a case study by the World Bank.

Senior Management Analyst, City of Savannah, GA ***5/88 - 10/90***

Senior Budget Analyst, Catawba County, NC (population: 105,000) ***8/86 - 5/88***

Downtown Project Manager, Lynn, MA (population: 90,000) ***10/84 - 6/85***

Assistant Camp Director, Elliot P. Joslin Camp **Summers 1984 & 1985**

Other Professional Experience

Instructor, Government Finance Officers Association (GFOA) national courses: *Budgeting Best Practices; Budget Academy;* and *Capital Budgeting and Financial Planning.* International City/County Management Association (ICMA) National Audioconference: *Practical Steps to Successful 311/CRM Service Implementation*.

Presenter, GFOA Annual Conference: *Understanding Your Revenue Portfolio*, 1996; *Best Practices in Capital Planning*, 2007; *Economic Development – Marketing Your Community*, 2008; *Budgeting for Outcomes*, 2009. University of North Carolina at Chapel Hill MPA Alumni Conference: *Managing Your Programs with Limited Resources*, 2003; *Inter-generational Management*, 2005. Florida Government Finance Officers Association Conference: *Finance Director's Role in Economic Development*, 2007. Georgia Municipal Association and Georgia City/County Management Association: *Budgeting for Outcomes*, 2009.

Author, ***The Savannah Story: The Road to Equity and Sustainable Community Development***, with Henry Moore in Economic Development in American Cities: the Pursuit of an Equity Agenda, edited by Michael J. Bennet and Robert P. Giloth, State University of New York Press, 2007, pp. 189 – 214. ***Best Practices: Ellis Square Public/Private Partnership in Savannah***, Government Finance Review, October 2006, pp. 44 – 47. ***Capital Program Considerations in Challenging Times***, Government Finance Review, June 2009, with John Fishbein, pp. 8 – 13. ***The Financial Responsibilities of Local Governments*** in Emerging Issues in Government Financing, Thomson Reuters/Aspatore, 2009, pp. 7 – 24.

Education

- ICMA Credentialed Manager
- Master of Public Administration, The University of North Carolina, Chapel Hill, NC, May 1987
- Bachelor of Arts, College of the Holy Cross, Worcester, MA, Major: Political Science, May, 1984
- Institute for Georgia Environmental Leadership, University of Georgia Fanning Institute, 2007
- Gallup Leadership Institute, 1997
- Certificate in County Administration, North Carolina Institute of Government
- Certificate in Budgeting and Financial Planning, North Carolina Institute of Government

Service

- Government Finance Officers Association: Executive Board (2008 – present), National Standing Committee on Retirement Benefits Administration (2008 – present), National Standing Committee on Economic Development and Financial Planning (2003 – 2008), National Standing Committee on Budget and Management (1996 – 1999);
- Elected School Council representative, Charles Ellis Public Montessori Academy (2005 – 2009)
- President, Leadership Savannah Board of Directors (2007 – Present)
- Executive Board Member, United Way of the Coastal Empire (2007 – Present)
- Elected Official, Southbridge Redevelopment Authority, Southbridge, MA, (1983-1984)
- Volunteer Savannah/Chatham Citizen Advocacy (2003 – Present)
- USA Swimming Certified Stroke and Turn Judge (2008 – Present)

Christopher Morrill

CB&A Interview

Christopher Morrill

Education

Master of Public Administration, University of North Carolina
Bachelor of Arts, College of the Holy Cross

Experience

Assistant City Manager, City of Savannah, GA	2001 – Present
Senior Municipal Finance Advisor, Research Triangle Institute, RTP, NC	1999 – 2001
Research and Budget Director, City of Savannah, GA	1994 – 1999
Peace Corps Volunteer, Ukraine	1992 – 1994
City of Savannah, GA	1988 - 1992
Research and Budget Director (two years) and Senior Management Analyst (two years)	
Senior Budget Analyst, Catawba County, NC	1986 – 1988
Downtown Project Manager, Lynn, MA	1984 – 1985

Background

The population of Savannah is 143,000 people. The City has 2,600 employees and Mr. Morrill supervises 220. The total budget is $280 million while the general fund component is $180 million. The three most important issues that face Savannah:

- Financial impact of the recession. Revenues have declined yet the demand for services remains high;
- Citizen engagement. Citizen participation in local government, and indeed awareness of what it is doing, has declined. Governments need to find new ways to engage and inform their residents; and
- Balancing the economic development with environmental goals while maintaining a high quality of life.

Interview Comments

Mr. Morrill has been an Assistant City Manager for eight years in Savannah, GA. Although he feels no need to leave his position, he sees the City Manager position in Roanoke as an opportunity that he cannot pass up. Roanoke is a progressive community and has some of the same challenges Savannah has. He notes that over the past 20 years, Savannah has made many significant changes for the better and he wants to bring not just his skills, but what he has learned, to Roanoke. He feels he can make a difference and help Roanoke become not just a better city but a better community. From a personal point of view, it is also one of few cities Mr. Morrill would consider moving to and living in. He enjoys the mountains and would be closer to family.

On a day to day basis, Mr. Morrill's management style is to promote collaboration. Teamwork and unity is important. He empowers his staff to accomplish their goals but provides the guidance to be successful. He is not a micromanager but gives his staff both the responsibility to get the job done but also the authority. Accountability is important as well. In times of crisis, Mr. Morrill will take full command and make the decisions that are necessary. He has a good understanding of when it is appropriate to guide and when he must lead.

Employees who have worked with Mr. Morrill would say he is enjoyable to work with and is a good mentor. He guides his staff and helps them develop. As they set priorities together, he is there to give them the resources and support they need. They would also note that it is not just business. He has a good sense of humor and attempts to make the workplace pleasant. Finally, he feels it is important to celebrate their successes.

The elected officials would say Mr. Morrill is a strong leader. He is proactive, assesses problems quickly and resolves them. He is a good manager and a team player. With the downturn of the economy, Mr. Morrill has taken more of a leadership role. Everyone recognizes that finance is one of his specialties and they tend to lean towards him for advice. He closely monitors the budget and keeps the elected officials well informed of the City's financial status.

Mr. Morrill's greatest strength is in financial planning. He has a strong finance background and is well experienced with budgets. In fact, he served as a resident advisor to the National Treasury of South Africa for about two years. He knows how to build a strong management and financial team. He enjoys learning, tackling new problems and resolving issues. He listens to people so he can understand their issues and learn from them. He is patient and sympathetic.

In terms of weakness, Mr. Morrill recognizes he focuses more on the big picture than the details. To combat this, he surrounds himself with good people who are detail oriented. By doing this, they help him see the details. It also allows him the freedom to pursue the projects and efforts that he and the City Manager feel will lead to improving Savannah.

Mr. Morrill's biggest achievement has been a recent budgeting change in Savannah. Specifically he introduced a new budgeting philosophy called Budgeting for Outcomes to the staff and the City County. He had learned about the approach at a government finance conference in 2007 and thought it would be particularly appropriate in difficult financial times. The idea is to allocate funding to those services that are a priority to the residents instead of focusing on cuts in each department. As such, the City focuses on funding the services with the greatest positive outcomes. It took some effort but he has now educated the staff and Council. Everyone has embraced the idea and last January the Council set the City's seven priorities for the next year. Then teams were created to address the priority teams. In all it involved 70 employees from different departments serving on seven teams. These teams have researched best practices from across the nation and followed examples in Washington and Iowa where the same philosophy has been implemented. They are ninety percent the way through the conversion. The result has been that they have found ways to maintain the core services and reduce costs. The effort has also lead to an increased level of collaboration within the government and in sharing services.

The teams will make a presentation to the Council on November 30th where they will report their progress.

When asked about mistakes, Mr. Morrill spoke of an area just outside of downtown Savannah that was to be developed as a public park and for some other uses. It was a great project that would have had a very positive impact on the neighborhoods in the area. However, the City did not do the leg work upfront to keep the neighborhoods apprised of the nature of the project nor the benefits that would result from the project. As a result, the residents fought the project and it was cancelled. He learned the importance of involving the community early on in a project so they are informed, supportive and can provide input to make the project better. The City missed an opportunity to develop a great area because it assumed the community would support it. The central lesson was, "Do not assume the community members will see and embrace the vision of a project if you do not spend the time educating them."

As the City has changed to Budgeting for Outcomes, it has provided a new way of measuring the performance of the organization. They are able to compare their outcome with other cities across America. Funding is provided to those services that have had clear outcomes of meeting priorities. Mr. Morrill still monitors the individual performance of each employee. At the year's beginning, he discusses their strengths and weaknesses with them and makes a plan to accomplish their goals for the year. Their progress is checked periodically and another formal meeting is conducted at midyear.

When asked about terminating employment, Mr. Morrill noted he has terminated the employment of several employees during his career. He tries to work with those who have performance issues through coaching and mentoring. Sometimes no improvements can be made. The person is simply in the wrong job from the point of view of skills or personality. It is hard to let people go under these circumstances but it has to be done. Ideally you can find a position in the organization that does suit the individual but that is not always a possibility. Those employees who misuse their privileges or break the law are very easy to let go. On one occasion he had to fire an individual in the parks department who was misusing public funds.

Mr. Morrill sees the challenges facing the next Roanoke City Manager as:

- Encouraging economic development that is a good fit with the community;
- Finding ways to help the poor climb out of poverty rate;
- Working with the school board to improve the City's schools;
- Working with the community to improve the neighborhoods; and
- Addressing code enforcement issues.

If given the opportunity to serve as the next Roanoke City Manager, Mr. Morrill would spend his first six months doing the following:

- Examining City's issues;
- Learning the history of the City and its neighborhoods;
- Listening to the Council Members' goals and vision;

- Familiarizing himself with staff's strengths and weaknesses; and
- Assessing the City's financial position. Getting a proposed budget together quickly for the 2010 – 2011 fiscal year will be a priority.

Mr. Morrill feels the new manager must be out in the community and transparent if he/she is to earn the trust of the community. When things are wrong, one must acknowledge that. They also need to be fixed without, to the extent possible, assigning blame. Citizens respect honesty. Also, good citizen engagement helps the residents feel they have a voice in the community. Mr. Morrill mentioned a citizens' academy that Savannah offered. It was an eight week course that focused on the different departments of the city government. He felt after this program the citizens had a better understanding and respect for the city government. They could see all the work that went into maintaining the City and the service the staff rendered in their behalf.

Mr. Morrill has a good relationship with the media. In his current position as Assistant City Manager, he is not in the media much. However, when needed, he has stepped in for the City Manager. He has worked with both television and print. He understands the media play an important role. He is honest and straightforward with his answers.

In his leisure time, Mr. Morrill enjoys being with his family, reading, biking, hiking and swimming. On occasion he has been a judge at swim meets.

Reason for Wanting to Leave Current Position:

Mr. Morrill is happy where he is but would like the opportunity to become a City Manager. He is in the peak years of his career and is ready to lead an organization. He has had the opportunity to work for and be mentored by an outstanding City Manager. He has also participated in the rebirth of Savannah. He wants to put what he has learned into practice in Roanoke. He just feels it is a great community, a community that has not realized its potential and a community he wants to live and work in.

Most Recent Base Salary

$150,000 base salary

Adjectives or phrases Mr. Morrill used to describe himself:

- Enjoys working with people,
- Visionary,
- Progressive,
- Good sense of humor,
- Values relationships, and
- Builds consensus.

Interviewer's Impressions

Energetic, experienced, competent, congenial, and straightforward. Intelligent and creative with a good sense of humor. Has an easy laugh and ready to be a City Manager.

Interviewed by:

Tiffany Gremmert
Colin Baenziger & Associates

Christopher Morrill

Background Checks

Background Check Summary for Christopher P. Morrill

Criminal Records Checks:

Nationwide Criminal Records Search	No Records Found
County	
Chatham County, GA	No Records Found
Durham County, NC	No Records Found
State	
Georgia	No Records Found
North Carolina	No Records Found

Civil Records Checks:

County	
Chatham County, GA	No Records Found
Durham County, NC	No Records Found
Federal	
Georgia	No Records Found
North Carolina	No Records Found

Motor Vehicle	
Georgia	No Records Found
Credit	Excellent
Bankruptcy	No Records Found
Education	Confirmed
Employment	Confirmed

Christopher Morrill

Reference Notes

Reference Notes
Christopher Morrill

Michael Brown, City Manager, City of Savannah, GA, (912) 658-3523

Mr. Brown hired Mr. Morrill in 1988. He recognized his strong skill set and wanted him to be a part of his management team. When Mr. Morrill went overseas to perform international services, Mr. Brown thought so highly of him that he held positions open for him. He simply wanted him back and on his team.

Mr. Morrill is a very skilled manager and a remarkable person. He combines precise analytical skills with an upbeat and optimistic personality. He is diplomatic with those he serves and considerate to their wants and needs. Mr. Morrill's background makes him a strong candidate. He was in the Peace Corp for two years in Ukraine. He also spent time in Northern Ireland, Peru, and South Africa with the Kellogg National Leadership Program. He wrote a local government finance law for South Africa cities and modeled if after what local governments do in the United States.

Mr. Morrill has led many redevelopment projects in Savannah. The redevelopment of Ellis Square is a recent one and involved redeveloping one of Savannah's squares that was first established in the 1700's. At some point, the square had been turned into a parking lot. Mr. Morrill noted that the lease was expiring and suggested the City redevelop the area as community square. He took the lead on the project and coordinated with developers and city groups. He also oversaw the financing of the project. The new community square is a huge success and is surrounded by shops and restaurants, and includes an underground parking structure.

Another project Mr. Morrill headed was Savannah River Landing, a fifty-four acre undeveloped tract adjacent to the historic downtown. Mr. Morrill coordinated with the developers to include an expansion of the river walk, retail stores, two hotels, single family homes, restaurants, and office buildings. He was the manager of the public part of the project. He forecast the cost of the necessary infrastructure, worked with the developers, rallied the support of the County and schools, and also sold the tax allocation district proposal to the voters. The project is underway and is much anticipated by the community.

Mr. Morrill listens well and is able to identify the essence of what someone is trying to say. He is a good communicator. He also is empathetic and patient. Often the City Council prefers to speak with him rather than the City Manager. He is easier to talk to and knows how to hold his ground. He is a good public speaker. He took a private sector speaker training course that monitored, criticized and improved his speaking skills. He is comfortable presenting.

Mr. Brown, as the City Manager, spends most of his time working with the Council to keep their interests on track. They are often difficult and demanding. He is not able to do much of what he used to do as City Manager. The Metro Police Department also demands much of his time and attention. As a result, he has turned over much of the day-to-day management of the City to Mr. Morrill. That includes projects, budgeting, pension plan changes, and policy initiatives. Although, Mr. Morrill has not officially held the title of City Manager, in reality he has had more

experience in urban city management than some City Managers in other cities. He has dealt with a high poverty rate, a large area of public housing, and many inner city problems.

Mr. Morrill is an ICMA (International City/County Management Association) Credentialed Manager. Through the ICMA he worked with an area in Indonesia to develop their tourism and the historical preservation of the Sultan's Water Palace Complex. This effort was to preserve and restore 50 acres of historic land. He helped the City get grant funding to restore the area. He also helped them write the first historical preservation ordinance. Along with the restoration of the Water Palace, a beautiful shopping corridor was created. Working with the largely Muslim country of Indonesia has educated Mr. Morrill. He was able to associate with the U.S. Ambassador to Indonesia and experience governmental processes in another country.

Again, even though Mr. Morrill does not hold the official title of City Manager, he has the experience and skill set to take this position. Mr. Brown highly recommended him although it would be a huge loss to him personally and to Savannah to have Mr. Morrill leave.

Adjectives or Phrases Used to Describe Mr. Morrill:

- Strong family man,
- Diplomatic,
- Considerate,
- Articulate,
- Humble,
- Well traveled,
- Bright, and
- Optimistic.

Strengths: Analytical skills, financial ability and diverse experience.

Weaknesses: None identified.

Lise Sundrla – Executive Director, Savannah Development and Renewal Authority, Savannah, GA – (912) 651-6973

Ms. Sundrla has known Mr. Morrill since 2001. They have worked as colleagues. The Savannah Development and Renewal Authority is not a city department. As a separate entity they have coordinated economic development in the downtown area of Savannah.

Mr. Morrill has been a critical component for much of the redevelopment in downtown Savannah. He has engaged the City and partnered with other agencies. He was integral to the planning efforts of Ellis Square. This area had been a historical square but was developed into a parking lot. He spent several years cobbling together the funding to restore the area to its original purpose of a public space. An underground parking lot was constructed along with several shops, restaurants and businesses. He was a guide and a mentor to the developers and to

the Renewal Authority on several issues and concerns regarding the project. He also spent many hours working with the Council to gain its support.

Mr. Morrill created strategic goals to focus on revitalizing the Martin Luther King corridor, once a premier historical African American neighborhood bustling with life. The placement of an overpass on I-16 stunted the growth of the area and limited the access to other areas. He has pressed for the overpass to be removed. By doing so, our lost street connections and nine acres of developable land would be reclaimed. He has negotiated local option sales tax and capital improvement dollars to fund the project. He coordinated the efforts of the City, the Renewal Authority and other private entities to stimulate the integral corridor. Already, a full size grocery store has opened in the area.

Another major project Mr. Morrill has orchestrated was Savannah Landing located in eastern downtown Savannah. The area has been underdeveloped since 1909. He secured the funds and involved the necessary agencies. The development links and compliments the historic downtown area. It also opens up connections to six lost streets and expanded the river walk 2,000 feet. Public squares were donated back to the City. Mr. Morrill petitioned for the first tax allocation to be used to support the economic development of the area.

Oddly, when it is time to make a presentation to the City Council, the person who is best is Mr. Morrill. They often try to do things that are not in the best interest of the City. They rely on Mr. Morrill to give them honest criticism and advice. He can speak on their level.

Ms. Sundrla trusts Mr. Morrill implicitly, which she considers a bold statement. She has approached him with personal and political issues. He has offered guidance and solutions to support her efforts. He is gifted with people. He respects others and in turn is well respected. He has excellent communication skills and is an attentive listener.

Mr. Morrill would be a fine choice for City Manager. He is well qualified. He has the skills and the character to lead.

Adjectives or Phrases Used to Describe Mr. Morrill:

- Reliable partner,
- Thorough planner,
- Engaging,
- Mentor,
- Respected, and
- Gifted with people.

Strengths: Team building, vision, people skills, and communication skills.

Weaknesses: None identified.

Reference Notes
Christopher Morrill

Lester B. Johnson III – Assistant City Attorney, City of Savannah, GA – (912) 238-5100

Mr. Johnson has known Mr. Morrill since 2001. Mr. Morrill has a fine personality and a calm demeanor. He has a good rapport with the citizens of Savannah. He also has a good working relationship with his staff and with the elected officials.

Mr. Morrill oversees the financial and budget concerns. He keeps a meticulous budget. One of the results is that the City has not needed to use any of its reserves since Mr. Morrill became the Assistant City Manager. As another of his responsibilities, he oversees the Recorder's Court. He makes sure the Court is making more money than the operating budget. He has worked closely with Mr. Johnson to find ways for the Court and the Judge to be more efficient.

Mr. Morrill also oversees all problems with ordinance violations. One of the trickier situations involved the some wealthy and very powerful residents of an historic district and the Savannah College of Art and Design. The neighbors were not happy about having the School in their neighborhood and complained it violated the parking ordinance. The ordinance required that a certain number of off street parking spaces per building were required if the building was to be used and the school did not have enough spaces. Mr. Morrill investigated every building in the area and the school was not the only building without enough parking spaces. To preserve the historic district, satellite parking lots were developed. Students were shuttled from them to the school buildings. Mr. Morrill communicated frequently with the neighbors and calmed their concerns. He demonstrated to them the financial importance the school to the City and how it brought millions of dollars to the community every year. He showed them that it was vital that they worked together. He was a good mediator between these two strong willed entities and was able to find a reasonable compromise.

Mr. Morrill is well respected by the public. He often speaks in town meetings regarding the financial state of projects. A major project was underway to solve the City's drainage issues. He spoke often in the town meetings explaining the project's finances. Many citizens were concerned the funds would run out before it was completed. Mr. Morrill explained in clear terms the financial condition of the project and the status of the contingency funds. He responded well to the large crowd, spoke in simple terms and reassured them that the money was there to complete the effort.

Mr. Morrill is designated to take over the City Manager's position when he is absent. He is also on call for every Council meeting to answer any questions or provide any financial information.

Adjectives or Phrases Used to Describe Mr. Morrill:

- Strong family man,
- Competent individual,
- Calm demeanor,
- Good rapport with others,
- Easy personality, and
- Responsible.

Reference Notes
Christopher Morrill

Strengths: Financial skills, problem solving skills, and building relationships.

Weaknesses: None identified.

Kenneth Sadler – Former Alderman, City of Savannah, GA (912) 661-0484

Mr. Sadler has known Mr. Morrill since 2000. Mr. Sadler was an Alderman for four years.

Mr. Morrill is bright and well educated. Even though finance had been his primary background, he has developed skills in other fields through his position as Assistant City Manager. He is a good leader and provides strength to his staff. Many of them lean on his expertise and ask for his advice. He mentors his staff and helps them grow.

Mr. Morrill's primary skills are in finance and planning. He knows how to maintain the long term financial health of the City and has helped it weather the financial downturn. He did so through sound financial practices and thorough planning. He actually anticipated the financial problems and adequately prepared the City for them. He understands how to spend money responsibly and which services are capable of producing revenue.

Mr. Morrill has a good relationship with each member of Council. He is responsive to their requests. They are willing to delegate to him because he follows up on projects and keeps them informed. He is straightforward and easy to talk to. Frequently Mr. Morrill has been easier to contact and work with than the City Manager.

Mr. Morrill focuses on people. Whether it is a Councilman or a citizen of the community, he will take time to listen to the issues they raise and look for a solution. He has an optimistic demeanor that puts people at ease. He has a good grasp of city issues and a sensitivity to their importance.

Adjectives or Phrases Used to Describe Mr. Morrill:

- Smart,
- Capable,
- Good planner,
- Strong financial background,
- Understands communities, and
- Relates well with people.

Strengths: Organization skills and financial background.

Weaknesses: None identified

Reference Notes
Christopher Morrill

Carol Bell – Central Services Director, City of Savannah, GA (912) 651-6401

Ms. Bell has known Mr. Morrill since 1994. They were colleagues when he was Budget Director and she now reports directly to him in his position as the Assistant City Manager.

Mr. Morrill is a dedicated public servant. He focuses on serving the people and is often a voice for the underprivileged. He volunteers his time to support agencies which help needy citizens. The City has benefited from his strong financial background. He has improved the financial operations by utilizing his analytical skills and thinking beyond the norm. Mr. Morrill is a member of the Government Finance Officers Association (GFOA), has written finance articles and taught classes for the Association.

Mr. Morrill is people oriented. He develops good relationships with entities outside the city government. He makes time to speak with residents and is well respected by them. He is an excellent communicator who can take technically complex issues and easily explain them to the common citizen.

Mr. Morrill has been a fantastic liaison between the City and the County helping facilitate the merger of police departments. Both agencies had their own police departments and had been policing much of the same territory which was not very cost efficient. In 2003, it was decided to formally merge the departments within a year. The merger was complex and Mr. Morrill was a major factor in its success. He focused on the commonalities and the benefits this partnership would provide for the citizens. The two separate departments combined to become the Savannah-Chatham Metropolitan Police in 2005.

Mr. Morrill is team oriented. He has been able to break down barriers, form unlikely partnerships and is creative. An example is a budgeting strategy he introduced to the City called Budgeting for Outcomes. Each department's budget is evaluated and projections are made based on priorities and results. Priorities were established by Council and Mr. Morrill then created seven results teams. Each team consisted of a broad base of global thinkers along with an expert member. For instance, the public safety team might have a member of the Fire Department or Police Department as an expert member. However, the team could also have members from Parks and Recreation, or Social Services. The result has been to bring the departments and their staff members together to accomplish the common goal of cutting costs and carrying out the elected officials' goals.

Adjectives or Phrases Used to Describe Mr. Morrill:

- Analytical,
- Encouraging,
- An advocate for the underprivileged,
- Involved,
- Experienced, and
- Knowledgeable.

Reference Notes
Christopher Morrill

Strengths: Dedication to serving the public. Strong background and experience in local government. Excellent people skills.

Weaknesses: None identified.

Jim Burgess - Mayor, City of Social Circle, GA (770) 464-3366

Mr. Burgess has known Mr. Morrill since 1996. He works as a lobbyist for the City of Savannah and is also the Mayor of a small town in Georgia.

As Mr. Burgess lobbies on behalf of Savannah to State Legislature, he relies on Mr. Morrill to provide him with pertinent financial information. Mr. Morrill gives him impact research and analysis reports related to specific pieces of legislation. He creates slides, charts, and graphs for Mr. Burgess to present to the State. He is quick to respond to Mr. Burgess' needs and provides him with thorough information.

Mr. Morrill is bright and well educated. His staff members have a high regard for him and value his high morals. He has strong people skills and is not overbearing. He is very easy to work with because of his first-rate personality.

Mr. Morrill has a good relationship with the governing body. He is very astute about political relationships. They may often disagree, but Mr. Morrill knows when to push and when he must submit. The Council can sometimes be more involved in day to day operations than they should. Mr. Morrill has successfully managed working with this group of individuals.

Mr. Morrill has worked on several successful projects in the community. He focused on cleaning up certain rundown areas and providing renewal in low income communities. One downtown renewal project included a parking facility, the expansion of the river walk, and added retail space. His financial acumen has been a big asset in making these projects successful.

Mr. Morrill has worked under a superb City Manager. He has been fully exposed to his skills and learned much from emulating them. He has academic training and has managed a diverse city. Advancing to City Manager would be an ideal step for him, and the timing is right.

Adjectives or Phrases Used to Describe Mr. Morrill:

- Good personality,
- Strong academically,
- Not overbearing,
- High morals,
- Bright, and
- Quick to respond.

Strengths: People skills**.**

Weaknesses: None identified.

Dick Evans - CFO, City of Savannah, GA (912) 651-6440

Mr. Evans has known Mr. Morrill since 2001. They have worked together monitoring the finances of the City. Mr. Morrill has a strong background in budgeting and knows how to balance a budget. He is very precise and concerned with numbers.

Mr. Morrill is very good at keeping others informed. He is open, clear, and direct in his communications. He knows how to word financial reports in ways that are understandable to anyone. He is a good consensus builder. He welcomes the input of his staff, keeps them informed,. He then creates the appropriate solution to the problem.

Mr. Morrill pitched the idea of a new budgeting process to the City. It is called Budgeting for Outcomes. He authored this process of establishing priorities first, then budgeting to finance the services which address those priorities. This new process has had the added bonus of organizing all departments to work toward a common goal.

Mr. Morrill developed good relationships with other entities outside the city government including the Chamber of Commerce, the historic community, developers, and other organizations. He represents the City well and has high standards.

Mr. Morrill would make a very good City Manager.

Adjectives or Phrases Used to Describe Mr. Morrill:

- Methodical,
- Personable,
- Analytical,
- Technically strong,
- Competent, and
- Works well with people.

Strengths: Financial skills.

Weaknesses: None identified.

Reference Notes
Christopher Morrill

Chris Miller – Creative Economy Consultant, Savannah, GA (912) 484-7192

Mr. Miller is a resident of Savannah and an entrepreneur. He has known Mr. Morrill since 2001. Mr. Morrill has proven a tremendous support and vital contact for Mr. Miller. He helps facilitate Mr. Miller's efforts by being accessible and getting involved in his projects. Mr. Morrill returns calls and follows up. He is open to new ideas and is supportive whenever he feels it will benefit the community. He focuses on results, not on politics. He takes on a role beyond simply handling the paperwork. He sees the whole community as a team. He uses his influence in the government to help outside projects succeed, projects that benefit the community. He understands that, if he helps outside agencies better the community then the pressure on the City to provide these services or changes will lessen or, alternatively, there will be more money to ay for the services.

Mr. Morrill is very patient. He has a pleasant approach to handling difficult situations. Whenever issues become politically charged, he is able to calm the waters, allowing the real issues to become clear. He listens willingly and is open to reconsideration of any preconceived ideas. His goal is to align the community so it can be the best it can be.

At times, Mr. Morrill has had to work with people who do not have the best interests of the City in mind. The options in dealing with such people are either: refuse to work with them, or work with them and realign their interests. Mr. Morrill has been a very positive influence and has a talent for turning negative intent into positive results.

As an example, the Savannah River landing is a 100 million dollar project proposed for the development of 54 acres in the downtown area. The developer had planned to create a gated community of single family homes. Mr. Morrill recognized the importance of developing this area. However, he did not feel a gated community would adhere to the historical sense of the area, nor would it be the best use of the land. He was able to convince the developer to make changes which would benefit them and the City. The project now consists of a 5-star hotel and spa, several luxury condominium towers, 17 single family riverfront homes, 11 blocks of single family town homes, retail stores, restaurants, art galleries and office buildings. Also, the public squares were donated back to the City. Both the developers and the City will greatly benefit from this project, which is currently under construction.

Mr. Miller knows of a major developer out of Atlanta who has taken a special interest in Savannah. He expressed to Mr. Miller that he has chosen Savannah primarily because Mr. Morrill has always been willing to talk to him about his investments. He returns his calls and helps him solve his problems. Encouraged by his interactions with Mr. Morrill, the gentleman will keep investing in the region.

Mr. Morrill deserves the opportunity to move up from his current position as an Assistant City Manager. He needs the freedom to bring about good things. It will be a large loss for the City of Savannah if he is chosen by another municipality, but he will make an excellent City Manager.

Reference Notes
Christopher Morrill

Adjectives or Phrases Used to Describe Mr. Morrill:

- Knowledgeable,
- Resourceful,
- Efficient,
- Possessing integrity,
- Professional, and
- Timely.

Strengths: Ability to work with outside agencies and create cohesion.

Weaknesses: None identified.

Beth Robinson, Human Resources Director, City of Savannah, GA, (912) 651-6925

Ms. Robinson has worked with Mr. Morrill since 1995 and reports directly to him.

Mr. Morrill's strength is in finance. He is well respected and has been nationally recognized for his work by the Government Finance Officers Association (GFOA). He has also been a member of various committees in the financial community. Although finance is his specialty, he has shown himself able to learn skills in many areas and to contribute in those areas.

Mr. Morrill is a team player. Rather than receive all the credit, he wants to see his whole team be praised for their efforts. He values his staff and their talents. As a manager he knows how to help redirect those who are not team players so they learn to collaborate. He is sincere, concerned, and involved. He is a visionary. He can see where the City needs to go and how to get there.

One of the most significant changes Mr. Morrill has made is called Budgeting for Outcomes. He has been the driving force and visionary behind this new method of doing business. It has taught the City to look at its services form the citizens' perspective and understand what services they value. Mr. Morrill has also set up the priority teams. He chose individuals whose vision went beyond their immediate area. He was very successful in identifying their strengths and values. He ensured the teams were a truly representative of all citizens: young and old, male and female, African American and Caucasian. The new budgeting process helped bridge a 15 million dollar shortfall.

Customer service is important to Mr. Morrill. He focuses his team's efforts on providing good service and lives up to that expectation himself. He does not use his position as Assistant City Manager to avoid serving individuals. He takes time to speak with citizens and to help them. He does not like conflict, but knows how to deal with it. He handles problems head on.

Mr. Morrill is a good presenter. He is comfortable in front of employees, citizens, and the Board.

Reference Notes
Christopher Morrill

Adjectives or Phrases Used to Describe Mr. Morrill:

- Sincere,
- Involved in the community,
- Professional,
- Articulate,
- Genuine, and
- Earnest.

Strengths: Team building, vision, and good management skills.

Weaknesses: None identified.

Jenny Payne, Management Services Coordinator, City of Savannah, GA, (912) 651-6420

Ms. Payne has known Mr. Morrill since 2005. She reports directly to him. He has been a strong leader and is the heart of the organization. He allows his employees to grow without boundaries. He trusts them and encourages them to do their work. He creates an environment in which the staff want to work hard for him and produce their best work. He is a very qualified individual and often acts as the City Manager when that person is absent.

When making a decision Mr. Morrill collaborates with his team to make the best decision for the community. The results may not always be successful based on some traditional measures of achievement, but they do represent the best interests of the whole community. That is his focus.

The City Council respects Mr. Morrill. They seem to respond to him better than they do the City Manager. Mr. Morrill speaks to each of them using their proper title. He understands they are the most important decision making body in the community so he addresses them professionally and with respect.

Mr. Morrill is very responsive. He quickly returns phone calls. He spends time with residents, often listening to their issues when the problem could possibly be handled by someone else. He is sensitive and in tune. When holding a discussion with someone, he will get up away from his desk to sit at a table, without his phone or Blackberry, so they can talk without distractions.

Mr. Morrill often plays the role of mediator. In one instance, some time ago, the Economic Development Authority was having an awards ceremony in a public place. Savannah Gay Pride group was also in the area handing out flyers. Police who were monitoring the ceremony asked the group to leave. Mr. Morrill was called regarding the situation. Although the Police Chief should have been the one to handle the situation, Mr. Morrill understood the political sensitivity needed. He met with the group and the Police Chief to explain and monitor the discussion. He helped the group understand that the police would have asked any group to leave the venue had the situation been reversed. The request of the Police was meant as an attack against their

specific group. He was successful in calming this group. He even arranged for the Economic Development Authority to follow up with the group and express its regrets.

As explained in earlier references, Ms. Payne mentioned his implementation of Budgeting for Outcomes. This new program has led to collaboration across departments. Another project Mr. Morrill facilitated was a 54 acre development of land adjacent to the historical downtown district. As also previously noted, the owners of the land had wanted to create a gated community. Mr. Morrill was able to convince them that sort of development would not be the best use of the property or nor would it be fit well with the historic downtown area. Together they came up with a plan to develop the area for mixed use, including single family homes, the extension of the river walk, retail spaces, and public squares. A tax allocation district was created, and forty percent of the land was donated back to the community. The owners of the property are very happy with the plan and how it will best meet the needs of the community. The project is in development now. The Master Planning for this project received the 2009 Charter Award from the Congress of New Urbanism and the 2009 Excellence in Government Finance Award from the Government Finance Officers Association of the United States and Canada.

Mr. Morrill has been the Chair for the Leadership Savannah Board of Directors since 2007. Leadership Savannah is an organization that sponsors community leadership, networking, and training. Each year a group of thirty people is selected to participate through an application process. The group reflects the diversity of the community and consists of people from every sector. Mr. Morrill is well respected in this arena. He makes it a priority to participate in their events.

Adjectives or Phrases Used to Describe Mr. Morrill:

- Leader,
- Encouraging,
- Team player,
- Genuine,
- In tune with people, and
- The heart of the organization.

Strengths: Leadership skills and people skills.

Weaknesses: None identified.

Robert "Bob" Bartolotta, City Manager, City of Sarasota, FL, (941) 954-4109

Mr. Bartolotta has known Mr. Morrill since 1989. He was the Assistant City Manager in Savannah when Mr. Morrill was the Senior Management Analyst to his office.

Reference Notes
Christopher Morrill

The City has greatly benefited from Mr. Morrill's financial skills. He negotiated a Local Options Sales Tax shares for Savannah along with those of Chatham County, and six other municipalities. He has devised employee incentives measured by productivity, and authored a bonus plan. He is an excellent writer and has published several articles regarding finance. He is a dedicated worker.

Mr. Morrill knows how to simplify complex issues. He can diffuse a heated situation through his patience and calm demeanor. He has a strong moral compass and stands firm in what he believes. He is an advocate for customer service. He has provided training to his staff in customer service. He listens to citizens' complaints and will work with them to solve their problem. He follows up with each citizen to check on the progress of the solution.

Mr. Morrill's communication skills are excellent. He is very talented at talking people through issues and building consensus. He has a excellent vision of the big picture and how to coordinate the efforts of his team.

Mr. Morrill is well prepared to be a City Manager. He manages eleven department heads including Budget, Audit, and Information Systems. He interacts with the Council every day and is well respected by them. He has excellent people skills.

Adjectives or Phrases Used to Describe Mr. Morrill:

- Visionary,
- Consensus builder,
- Focused on people,
- Hard worker,
- Ethical, and
- Excellent writer.

Strengths: Diplomatic skills, people skills, vision, and customer service oriented.

Weaknesses: None identified.

Gregg Schroeder, President, United Way, Savannah, GA, (912) 308-3810

Mr. Schroeder has known Mr. Morrill since 2002. Mr. Morrill is an active member of the United Way Board of Directors. He is very enjoyable to work with because he has a genuine personality.

Mr. Morrill has been a good partner to the United Way. He has been a key player in the success of several projects. One such project involved addressing the need for quality early childhood education. Savannah has a high drop out rate. To combat the problem, the United Way wanted to create a positive educational path for young children through use of a child care center.

Reference Notes
Christopher Morrill

The community did not have one. United Way teamed up with a local construction equipment company, JCB Inc. to develop a nationally accredited child care center. Mr. Morrill joined with them as a City representative. JCB and United Way provided the funding for the project, and the City provided the infrastructure for the center. Mr. Morrill shared the same vision as the United Way and used his resources and talents to bring their projects to successful completion.

Mr. Morrill is a key person in the city government. Often staff or citizens will approach him rather than the City Manager. He takes anyone's call and listens sincerely. He is very likable and easy to work with. He has masterminded the financial stability of the City. His implementation of the Budgeting for Outcomes method has been a great success.

In town hall meetings, Mr. Morrill is very good on his feet. He treats others with dignity and respect. He patiently listens to their complaints. Even when Mr. Morrill has to bring bad news to neighborhood associations, he is able to explain the reasons in a manner that helps them understand. He has good rapport with the general public because he responds to their needs.

Mr. Morrill is experienced and well qualified to be a City manager. He is a hard worker and a positive person to be around.

Adjectives or Phrases Used to Describe Mr. Morrill:

- Thorough,
- Accomplished,
- Outcomes focused,
- People oriented,
- Optimistic, and
- Realistic.

Strengths: Team player, vision and dedication to serving the community.

Weaknesses: None identified.

Prepared by: Tiffany Gremmert
Colin Baenziger & Associates

Christopher Morrill

Internet Research

Savannah Morning News (GA)
November 6, 2009

ENMARK, CITY TO TRY FOR COMPROMISE
Author: *LESLEY CONN*

A rezoning request for a planned Enmark station is being delayed two weeks so city officials and Enmark representatives can try to develop a compromise to appease residents dead-set against the station. Poplar Place residents are worried the rezoning will allow Enmark to build a convenience store and pumps at White Bluff Road and Hampstead Avenue, which will further push commercial development into their residential neighborhood.

Several City Council members at Thursday's meeting expressed their support for Enmark, which has promised to build a store that would use subdued colors, low signage and other design elements to better blend with the residential neighborhood. Alderwoman Edna Jackson said she disagreed with City Manager Michael Brown's initial recommendation to deny the rezoning. "That corner has been an eyesore for years," she said. "Anything would be better."

Aldermen Tony Thomas, Van Johnson and Jeff Felser concurred. As council members debated the rezoning, Alderman Clifton Jones repeated and expanded on an allegation from one of the residents. He stated that Ben Farmer, a local real estate agent and member of the Metropolitan Planning Organization, had an agent who had sold the property to Enmark. Alderman Van Johnson called the allegation "very unsettling," and Mayor Otis Johnson directed city staff to investigate the claim. He was uncomfortable that the statement had been made publicly, he said, and said if found untrue, it would be corrected publicly.

Farmer, reached after the meeting, said the claim was untrue. He once had a listing on the property, but it expired with no sale. "We had nothing to do with that transaction. If I had I would have disclosed it." Farmer and Jones spoke late Thursday, and the alderman said he will issue a public apology. "I'm prepared to do that at our next meeting," Jones said.

In other action, the council:

- Did a first read on a revised, proposed ordinance that would require mandatory alcohol server training, registration and permitting. The council had been struggling with how broad the ordinance should be, and after discussion determined it would not expand the requirement to include all hotels, restaurants and other businesses that serve alcohol. Most of the problems with underage drinking center in nightclubs, they agreed, so other establishments would only be forced to comply if they were cited for alcohol-related issues.

- Because of lower sales tax revenues, the city is anticipating receiving $33 million less in special purpose local option sales tax money, which helps fund projects like the Forsyth fort renovation, drainage projects, park improvements and similar work, Assistant City Manager **Chris Morrill** told council during its workshop.

The city had been expecting $160 million, but more likely will receive about $130 million. That will require reviewing the city's list of projects and delaying some of them, **Morrill** said. Council members did a preliminary review of dozens of projects, but will do a more detailed review of projects at its upcoming budget retreat, which is scheduled for Nov. 30.

Morrill also showed council that because of lower revenues, the city is reducing by several million dollars the amount of money it sets aside in its general fund for capital improvements. From 2006 to 2008, the city spent about $5 million. This year, it set aside no money in the fund, and for 2010, plans to set aside $1.6 million. Because of the reduction in funds, the city will concentrate only on needed maintenance projects with those monies.

- The council got an overview of the proposed Historic District Ordinance. Once passed, it will provide specific guidelines for building height, design standards and the approval process for new structures in the district. Brown called the public input and review process "one of the most exhausting" the city has undertaken.

Council will consider the ordinance on first reading at its Nov. 19 meeting.

Savannah Morning News (GA)
September 25, 2009

BEST, WORST OF TIMES
LOCAL ECONOMY 'RIGHT IN SYNC' WITH REST OF STATE, NATION
Author: *ARLINDA SMITH BROADY*

Economic growth in the Savannah Metropolitan Statistical Area, which includes Chatham, Bryan and Effingham counties, significantly slowed in 2008, according to data released Thursday by the U.S. Department of Commerce's Bureau of Economic Analysis.

Out of 366 metropolitan areas, Savannah ranked 144 with a Gross Domestic Product growth rate of 0.2 percent. "These statistics suggest that the Savannah area profile is right in sync with the rest of the state and the nation," said Jeffrey Humphreys, director of the University of Georgia's Selig Center for Economic Growth. "This recession was really tough on the entire region, and recovery will be slow."

The slowdown in economic growth didn't just affect this region, data showed. About 60 percent of metropolitan areas saw economic growth slow down or reverse. Real Gross Domestic Product growth slowed in 220 of the nation's 366 metropolitan statistical areas last year, from 2 percent in 2007 to 0.8 percent in 2008.

Downturns in construction, manufacturing, finance and insurance restrained growth in many metropolitan areas, including Savannah, with government spending showing the most growth.

"No one was really surprised by the data," said **Chris Morrill**, Savannah assistant city manager. "We knew the recession hit us harder and later than a lot of areas." And although it's down from previous years, the city is doing better than the state as a whole, which saw slightly negative growth at -0.6 percent. "We're investing our very limited resources in economic growth and quality of life," **Morrill** said, "and what's a more important quality of life issue than jobs?"

Business in Savannah (GA)
September 16, 2009

CITY PROJECTS WOULD HELP DOWNTOWN MERCHANTS
Author: *ARLINDA SMITH BROADY*

During a meeting of the Downtown Business Association last week, Savannah Assistant City Manager **Chris Morrill** outlined developments designed to help the association's members and others. The first step in unifying economic development efforts was to unify the city logos, **Morrill** said. So the city commissioned a new logo based on the city squares. "It's uniquely Savannah, and it ties all the departments together," **Morrill** said. Another important step, he said, was to grow population. So the city annexed enough land to increase its area by 40 percent. "We were losing population for the past 30 years," **Morrill** said. He compared Savannah's fate to Detroit, where residents moved to the suburbs, causing the city to raise taxes to fight crime and urban blight.

Now, several plans are in the works, including developments around Ellis Square and the fort under construction in Forsyth Park. The Whitaker Street Garage, which lies beneath the square, has been in use since October 2008. To break even for operations and debt service, the garage must make $1.3 million this year, said Sean Brandon, director of the city's Mobility and Parking Department. By the end of July, revenue figures for the Whitaker Street Garage are at $766,000. "We'll probably make our projections," Brandon said. "It's feast or famine. ... Some weekends we clear as much as $10,000, and others the garage is nearly empty."

The above-ground portion promises to be people friendly. "It will be the only square with a building on it," **Morrill** said. There will be a hospitality center and permanent restrooms. One of the most fanciful features is the fountains with 12-foot water jets that can project 260 colors of LED lights. Those fountains can be turned off, and the square is wired to accommodate concerts and other forms of outdoor entertainment. It can hold about 1,000 people and will have tables and chairs instead of benches. "Benches aren't good for interaction," **Morrill** said. "We want this to be a place to gather and be with friends and family."

As for the fort at Forsyth Park, a temporary band shell will accommodate concerts, plays and other events but can be disassembled for everyday use. When the band shell isn't in use, fountains similar to ones at Ellis Square will be in place. "We envision a very family-friendly atmosphere where kids can play and parents can relax," **Morrill** said.

A restaurant leased by the Kessler Group, owner of the Mansion on Forsyth, and "the best bathrooms in town" will be another draw. These projects and others are part of the city's plan to partner with businesses to create a prosperous region. "We need to move away from the mentality that citizens and businesses are customers," **Morrill** said. "We need to work toward partnerships. The way to get out of this recession faster is to build community relationships."

Savannah Morning News (GA)
September 9, 2009

MORE CITY BUDGET CUTS COMING
AS REVENUES FOR 2010 LOOK LOWER, TEAMS OF SAVANNAH CITY EMPLOYEES PROPOSE CUTS TO SERVICES, DEPARTMENTS
Author: *LESLEY CONN*

The city of Savannah is looking at further reducing staff, merging offices and ending some services - decisions that will be made in the coming weeks to trim another $3 million in spending by the end of the year. The bleak prospect for 2010 will further spur spending cuts. City budget analysts already see a $10 million decline in general fund revenue compared to 2009, sales tax revenue remains unpredictable and property assessments that generate the bulk of city income have been ordered frozen until 2011 by the legislature.

One of the more visible city services being evaluated: Ending the Savannah-Chatham police department's mounted patrol unit. Officers would be rotated into patrol cars to fill vacancies. "We're questioning everything," said Assistant City Manager **Chris Morrill**. "If it was just about today, we'd be OK, but the problem is we don't know about revenue for the rest of the year."

A lower city revenue base, he said, is likely going to stay lower for the next 10 years, which will require the city to re-examine its spending. The city already has reduced spending by about $12 million this year to offset lower revenues. That largely has been accomplished by leaving non-essential jobs outside public safety vacant. Nearly 200 of the city's 2,600 positions are unfilled. Bret Bell, the city's director of public information, said the city is continuing to look at eliminating positions, but "we're not looking at mass layoffs."

BUILDING A BUDGET

Many of the spending cuts for the 2009 budget will be implemented immediately and will be handled as part of day-to-day operations. Others, such as a proposal to end the mounted patrol unit, have evolved as teams of city workers participating in a new budgeting process for 2010 evaluate city services. The teams are evaluating services under a variety of umbrellas, such as neighborhood vitality, public safety, health and environment, poverty reduction and economic development. City Manager Michael Brown will use their recommendations to build the city's proposed budget in October. That will be presented to City Council members, who will evaluate the proposal and can mandate changes before approving the budget in a series of public hearings. That, too, shows a lean year ahead. The proposals the teams received for city services totaled $221 million, but the projected revenue available for them equaled $214 million.

LOOKING FOR SAVINGS

Among some of the other cost-saving measures:

- A employee task force created to find savings in city mowing services identified $627,000 in cuts.

Some was achieved by notifying citizens who had "tree lawns" - grassy strips between their street and sidewalk - that the city no longer would trim them. But larger savings were found by not hiring seasonal staff, reducing mowing frequency along streets, cutting back on plantings and using in-house staff to maintain Laurel Grove Cemetery rather than fill a maintenance contract. Small outlying parcels will be contracted out, Bell said, which will cost less than hauling the city equipment as far south as Coffee Bluff to trim a small lot.

- Consolidating fire and police dispatch services by Jan. 1. The primary reason, **Morrill** said, is to improve services, but some cost-savings are anticipated.

- Merging offices and employees.

The Citizen Office, which coordinates public notices to neighborhoods during large city projects and other city initiatives, will merge with the Public Information Office.

Susan Broker, director of the Citizen Office, is filling an administrative position in the city manager's office left open since Sean Brandon, the former assistant to the city manager, became the city's director of mobility services and parking in April 2008.

Three staffers under her will move into Bell's office, and by November, the city no longer will pay rent at an office on Oglethorpe Square.

Annual savings: $15,000 in rent.

"There are talks about doubling up other offices, and even though there may not be a personnel reduction, there are reductions in rent, in office equipment and other resources," Broker said. "Basically, everyone in the city is going through their budget and looking to see what they can do without at least for the next year."

Savannah Morning News (GA)
June 19, 2009

CITY STANDS BY RIVER PROJECT

OFFICIAL SAYS $20 MILLION OBLIGATION FOR SAVANNAH RIVER LANDING STILL A 'GO' DESPITE FLAGGING ECONOMY
Author: *LESLEY CONN, 912-652-0326, lesley.conn@savannahnow.com*

The city of Savannah isn't backing away from its commitment to Savannah River Landing, even as the economy challenges the waterfront development and the city budget. At a City Council workshop session Thursday, Assistant City Manager **Chris Morrill** outlined the $20 million in road, drainage and other improvements the city will undertake. That money will come from revenue collected from a special tax allocation district established around the riverfront development.

Alderman Tony Thomas was the first to question why the city was proceeding during the uncertain economic times, especially given that from a public safety standpoint, President Street and General McIntosh Boulevard have been issues for years. He said he supports the project but added: "This raises a question for me. I've never seen us push an issue this hard."

The improvements, **Morrill** said, are about more than public safety. "Savannah River Landing cannot really have any economic development until we deal with President Street," he said.

Aldermen Van Johnson and Jeff Felser later said they believe the city is sending mixed messages about the development. "It was always my understanding of them as being mutually exclusive projects," Johnson said. "Today I got the impression they are tied together."

Savannah River Landing's developers have invested $60 million in site improvements, Finance Director Dick Evans said, and the $1.4 million in debt service the city is paying annually is still manageable and worth it to honor the private developer's investment.

The mixed-use residential/commercial and retail development has a total estimated price tag of $800 million, and it promises to redefine more than 40 acres of the waterfront just east of the Marriott Savannah Riverfront hotel. As part of the original development agreement for Savannah River Landing, the city had signed off on elevating and widening President and General McIntosh and straightening a section of McIntosh. A second phase of President Street improvements, which include building a bridge over railroad tracks, was not part of the agreement. In trying to secure federal stimulus funds for that phase, city officials emphasized its hurricane evacuation and improved safety features. "I saw no difference in the plan as it was proposed all along," Alderwoman Mary Osborne said. "That's a major development. Nobody's going to walk away from that."

The improvements along President help not only Savannah River Landing but also other planned commercial and residential developments on the south side of the road, Osborne and city officials said.

Should Ambling Cos., the developer, fail to move forward on its investment, City Manager Michael Brown said, the city would have a site with improved roads, drainage, a riverwalk and established water and sewer lines. He and other city officials said they were confident Savannah River Landing would remain viable and were confident vertical construction would begin next year, as company officials have stated.

Savannah River Landing continues to operate from trailers on the site. On Monday, the project plans to unveil a new Web site, said Kate Freeman, the company's marketing and community relations manager.

Sales efforts continue on the residential, commercial and retail front, but she said she could not disclose any information about whether any new commercial or retail clients had been signed up. "The economic times have certainly been a lesson in patience for us," she said. "But we're still committed to the original vision of the project."

Savannah Morning News (GA)
March 27, 2009

SAVANNAH TIGHTENING ITS BELT
COUNCIL TOLD BUDGET COULD BE SHORT BY $9 MILLION
Author: *LESLEY CONN, 912-652-0326, lesley.conn@savannahnow.com*

One out of every 10 city positions is going unfilled as the city of Savannah deals with declining revenues expected to total $9 million. The city has left open 250 positions and by year's end expects to have 330 positions vacant, said **Chris Morrill**, the city's assistant city manager over financial services. Those openings so far have saved the city $1.6 million. A team of city administrators reviews any job positions to determine if it needs to be filled. Only lower-level police and fire department jobs are exempt from review so that public safety needs will continue to be met. The city employs about 2,500 workers. Other teams of employees are examining key aspects of city operations to look for further cost-cutting measures, but city leaders cautioned the City Council on Thursday that the shortfall could be higher than anticipated.

One factor that could change the financial projections is any changes the state legislature may pass regarding property and sales tax collections. "Bottom line, we may need to cut $10 million to $15 million," City Manager Michael Brown said. "I hope it's not $20 (million)." Revenue reports from the first two months of the year show collections down in some key areas, **Morrill** said.

February sales taxes are down $388,000 from the same time in 2008, and hotel/motel taxes for February are down $191,432. Building inspection fees are down $169,113. Some key areas are doing better than expected. Recorder's Court fees were $142,148 above projections, and water and sewer tie-ins - an early indicator of new building - are about $100,000 above projections. In February, the city collected $600,000 in tap-in fees.

Morrill's budget presentation came during a council workshop. During council's regular session, they took the following action:

- Passed a resolution to be sent to the Georgia Department of Transportation restating the city's top priorities for transportation projects. None of the city's priority projects was included in the first round of federal stimulus projects the state selected. Their top item for the second round will be the widening and elevation of President Street, a $36 million project. Council members also asked that local congressmen and groups such as the National League of Cities get a copy as well so they could see that stimulus money was not making its way past Atlanta.

- Asked city staff to return within 60 days with recommendations for instituting a registration and card system for bartenders and servers, as well as stiffer penalties for minors who try to buy alcohol.

- Approved a contract for $1.5 million for curbs, gutters, underground storm drainage and pavement improvements in Fernwood, a neighborhood near Savannah State University. The project has been on the city's to-do list for several years.

- Granted a liquor license to the owners of Sweet Melissa's, 35 Whitaker St. Owner Denise White Pipkin agreed alcohol would be served only to dine-in customers. City officials had been worried customers would be allowed to drink and congregate outside, which would contribute to pedestrian traffic problems at the busy intersection.

Savannah Morning News (GA)
February 25, 2009

CITY PREVIEWS STIMULUS SPENDING
COUNCIL MEMBERS LIST $422 MILLION IN ELIGIBLE PROJECTS, RANGING FROM TRANSPORTATION TO JOB TRAINING AND DAY CARE
Author: *LESLEY CONN, 912-652-0326, lesley.conn@savannahnow.com*

The city of Savannah has identified $422 million in local projects and programs that could be funded under the federal stimulus package.

Entries include $50.7 million for widening and elevating the President Street Extension, $30 million to upgrade Savannah-Chatham police headquarters on Habersham Street, $182,300 for a downtown day care center and $100,000 for an electricians training institute.

Now city leaders have to determine which projects should have the highest priority - and which will have the greatest chance of being deemed worthy by the 13 federal departments that will award funding to competing projects that will pour in from across the nation.

All the projects under review are considered "shovel-ready," meaning work - and the workers who would be hired - would start quickly.

Assistant City Manager **Chris Morrill** said the city was ahead of the game because of its five-year capital improvement planning, which would drive what the city submitted. "It's a shotgun approach," he said. "Those who will be successful will be flexible ... and will be able to mold their project to fit the criteria."

Savannah Morning News (GA)
February 24, 2009

CITY, COUNTY DISPUTE JAIL BILL
SAVANNAH, CHATHAM WORK TO RESOLVE $600,000 IN CHARGES
Author: *ERIC CURL, 912-652-0312, eric.curl@savannahnow.com*

The time it takes Savannah to reimburse Chatham County for costs associated with housing jail inmates has some county officials concerned. City officials say extra time is needed to scrutinize the county's error-filled monthly bills. According to an intergovernmental agreement, Savannah is supposed to pay the county $35 per day for each inmate arrested in the city. Bills are to be sent and paid monthly, but a back and forth between the two governments regarding certain charges has delayed the process. The delays have been a recurring challenge and county officials are trying to speed up payments, said County Manager Russ Abolt. "It's money we feel we're due," Abolt said. Some county commissioners voiced concerns after no reimbursements were received after the first quarter and only a small portion of the amount budgeted had been received after the second quarter, which ended Dec. 31. Abolt attributed the delay to the time the city takes checking the bills. On average, it takes two to three months from the time the Sheriff's Department sends an initial list of jail fees until the final bill is sent, said Linda Cramer, county finance director.

A final bill for August, September and October did not get sent until January, Cramer said. Once the bill is sent, Savannah typically pays in two to three weeks, Cramer said. Savannah paid the county about $1.3 million last year for inmate housing, she said. About $404,000 has been received this year. "When we have an accurate bill, we pay it," said Assistant City Manager **Chris Morrill**. But accuracy is not typically the case, **Morrill** said.

Between 2003 - when the agreement became effective - and 2007, more than $640,000 worth of errors were discovered, Recorders Court Director Prince Johnson said in a memo regarding the issue. An average of 10 percent, or almost $10,700, worth of errors is found each month, Johnson said. Sheriff Al St Lawrence and Jail Administrator Col. McArthur Holmes said there are disagreements regarding certain charges. The city may refuse to pay for a city inmate once another jurisdiction places a hold on that inmate, Holmes said. The city should still pay the bill, he said. The day an inmate is "bound" to the courts is also commonly a matter of dispute. City officials say inmates are often classified as city prisoners when the arrest actually took place in the unincorporated county. The county has no similar complaints from the other municipalities, St Lawrence said. Other municipalities may return their rosters more quickly, but their bills consist of only a small fraction of the bookings reviewed by Savannah, Johnson said. Savannah typically reviews an average of 930 inmates and more than $100,000 in charges, while Garden City was invoiced an average of about $5,600 in charges for the first 10 months of 2008. The county proposed having the city pay an average advance each month to speed up the process. Depending on the actual expense, the city would later be credited or charged. City officials declined. The county should work on fixing the errors before the city should have to pay an incorrect bill, **Morrill** said.

Entrepreneur
August 2008

GFOA's new president-elect and executive board.(Government Finance Officers Association) (Paul A. Macklem, Catherine R. O'Connor,)

The Government Finance Officers Association is governed by an 18-member executive board, which consists of 15 members-at-large serving staggered three-year terms, the current president, the previous year's president, and the president-elect. At the association's annual meeting in June, GFOA members voted for a slate of nominees for president-elect and five new members-at-large, each of whom is profiled below.

[Note: We have included only the information for Christopher Morrill who was appointed as an at-large board member.]

CHRISTOPHER P. MORRILL

Assistant City Manager--Management and Financial Services

City of Savannah, Georgia

Chris Morrill has been a GFOA member for 17 years. He is a member of the GFOA Committee on Economic Development and Capital Planning and also served on the GFOA Committee on Governmental Budgeting and Fiscal Policy from 1994 to 1999. **Morrill** has been an instructor for various GFOA training seminars including Budgeting for Budget Analysts, Capital Budgeting, and Best Practices in Budgeting. He also reviews budgets for the GFOA's Award for Distinguished Budget Presentation Program. He has spoken on issues including economic development at GFOA annual conferences as well as at Florida and Georgia GFOA conferences. He has also written articles for the Government Finance Review.

Morrill shares his expertise internationally He was a municipal finance advisor to the South African National Treasury and a Peace Corps volunteer in public finance in Ukraine. He is a Fellow of the Kellogg National Leadership Program. In Savannah, he instituted annual five-year financial planning and five-year capital planning, reducing the tax millage rate by 27 percent in 10 years.

Savannah Morning News (GA)
July 19, 2008

CITY MULLS HIKE ON TAX REVENUE, RISING FUEL COSTS
GAS PRICES, LOWER REVENUE BEHIND SAVANNAH'S CONSIDERATION AGAINST ROLLING BACK PROPERTY TAX FOR FIRST TIME IN A DECADE
Author: *ERIC CURL, 912-652-0312, eric.curl@savannahnow.com*

High city fuel costs and less consumer spending mean some Savannah property owners will pay more in property taxes this year. City Manager Michael Brown recommended during a City Council workshop Thursday that the board not roll back the property-tax rate as it has done for the past 10 years. "We could reduce it, but there are several reasons not to," Brown said. "We're recommending you stick with what you got at the moment." Maintaining the tax rate at its current level of 12.5 mills - or $12.50 per $1,000 of assessed property value - means the owner of a $125,289 home will pay $19 more than in 2007 due to increased property value, said Assistant City Manager **Chris Morrill**.

Those same property owners would only pay $9 in additional property taxes if the tax rate was rolled back to the recommended level. Savannah officials contend the extra money is needed because the city is facing a projected $1.1 million shortfall in sales-tax revenue and about $800,000 in unexpected fuel costs. Much of the revenue decline comes from a drop in food, automobile, home and lumber sales, **Morrill** said. A larger-than-expected increase in property-tax revenue is enough to cover the difference but only if the tax rate is kept flat.

Commercial and residential properties that are not primary residences could see more of an increase because they're not protected by the Stephens-Day Homestead exemption, which essentially freezes a home's taxable value but factors in consumer price index fluxuations. There have been some positive developments during the year, **Morrill** said. Property-tax revenue is expected to increase 3 percent more than the city originally anticipated, which would bring in an extra $1.9 million. More than 60 percent of the growth in property value, about $228 million, comes from new development as opposed to reassessed values of existing property. "This is the type of growth we want," **Morrill** said. The implementation of energy savings programs in city buildings last year, such as new heating and air-conditioning controls and weatherized buildings, has resulted in a reduced power bill, **Morrill** said. "It's the first time I can remember we are actually spending less on electricity," he said. Hotel and motel tax revenue appears likely to come in even or slightly above the budgeted amount. "Savannah has been amazing the last five years," Brown said. "A lot of these (hotels) are running around with 70, 80 percent occupancy." Still, the tax rate needs to stay where it is to cope with the ongoing "recession," **Morrill** said.

Mayor Otis Johnson said he was concerned Georgia lawmakers could limit the amount of property-tax revenue the city takes in after making unsuccessful tax reform measures this past legislative season. "So I think we have to take a very conservative approach to what we do," Johnson said. "The question is will we ... get caught up in the trend of the day and want to get on the rampart and say we cut taxes. If we cut taxes, what are we going to cut in services?"

Savannah Morning News (GA)
May 1, 2008

LNG NEVER PAID FIRE FEES
SAVANNAH OFFICIALS WANT TO COLLECT MORE THAN $500,000 IN UNPAID BILLS

Author: *SCOTT M. LARSON, 912-652-0397, scott.larson@savannahnow.com*

The El Paso Corp. made more than $1 billion last year, in part from the liquefied natural gas plant it owns on Elba Island. But the company refuses to pay nearly $500,000 the city of Savannah claims the company owes in fire protection fees from the last three years, plus $178,000 due in October. "I can't imagine $178,000 to protect the community that they are located in would be a real financial hardship for the company," said Assistant City Manager **Chris Morrill**.

In fact, in its 30-year existence on the island, the multi-national corporation has never paid for fire protection.

It never has paid for the eight calls to which Savannah Fire & Emergency Services has responded since 2001. But the city still covered the plant, including a freebie on Sept. 24, 2001, to rescue four people working at the site who got trapped in a basket 80 feet in the air. Now, the plant is in the middle of a fire protection controversy. After the city went to the company about the past due bill, El Paso decided to sign a contract with Southside Fire & Emergency Services. "I'm not sure what their thinking is, but I can tell you if they want real fire protection for an industry, the city of Savannah is the only entity that can provide that level of service," **Morrill** said. "So it must be about money."

El Paso spokesman Bill Baerg would only say that Southside is a better fit, although city officials say Southside doesn't have the same capabilities. Fire aside, the plant and others like it are concerns for environmental activists and politicians alike. Area activists argue that the plant poses a serious fire and explosion threat. Liquefied natural gas is a natural gas cooled to minus-260 degrees, but it won't burn in its liquid state. Industry officials say that means it won't explode and level houses for miles as opponents claim. The Elba Island facility opened in 1978 but closed two years later. It re-opened in 2001 and has never had any incident with the 200 ships that have delivered cargo there since.

The U.S. Congress is worried about terrorists attacking liquefied natural gas ships. Last week, the House of Representatives passed a bill requiring the Coast Guard to enforce security zones around arriving tankers. El Paso's Savannah site is approved to nearly double to 15.7 billion cubic feet by 2012.

Savannah Morning News (GA)
March 26, 2008

LOGO UNITES CITY SERVICES
LOCAL DESIGN FIRM CREATES UPDATED BRANDING FOR CITY ON MODEST BUDGET
Author: *EMILY GREEN, For the **Savannah Morning News***

You've probably seen it around town. The subtly scripted "Savannah" prominently placed in black beside a tilted, abstract version of the city's historic green squares. The city of Savannah's new logo is gradually showing up on everything from maintenance vehicles and parking meter receipts to letterhead and envelopes. "It was important that the design be timeless, not trendy, so it would not go out of style," **Morrill** said. "This should be a viable design for decades."

Don't let the simplicity of the logo fool you into thinking it is just another pretty design.

Months of research and proposed sketches by local design firm brightwhitespace, partnered with an identity design committee made up of city employees, went into the production and implementation of the updated logo, now visible all around Savannah.

IDENTITY CRISIS

The plan for rebranding the city of Savannah's image began during a conversation concerning the more than 40 individual logos that represented various service departments. Film Commissioner Jay Self and Assistant City Manager **Chris Morrill** discussed a need for one unifying look to represent the city as a single entity and thus began the initial stages of rebranding.

The many existing department logos were not coherent or recognizable as part of the city of Savannah. Some didn't even represent the intended service to the public, creating potential confusion for citizens wondering which services their tax dollars supported.

"We have thousands of employees, thousands of vehicles out there doing work all day and people don't think about them all being the city of Savannah," Self said.

THEY GET SAVANNAH

The city hired Ariel Janzen and Rigel Crockett of brightwhitespace to work on the project in stages. Their previous experience with identities for the Liberty Parking Shuttle and Tourism and Film Department provided some established trust, but more importantly, the committee chose the local firm because they "get" Savannah.

"There's so much about Savannah that's so subtle," **Morrill** said. "You really have to live here to get it. Having a local company rather than some big national firm come in was important to the process."

From studies and surveys to sketches with various colors, typography and imagery, the two teams collaborated throughout the process.

PLACE BRANDING

"With so much competition for businesses, for visitors, you have to put out a positive image," **Morrill** said. "You have to put out an image that says 'we have our act together.' "

Janzen and Crockett researched other cities with successful rebranding and conducted surveys with Savannah residents, which they used to help compile a list of identity requirements, design specifications and branding goals with the committee.

"As with any identity problem, the challenge was one of perception," Crockett said. "Many city employees did not feel good about their outdated 1950s-style, institutional business cards. Additionally, because each of the city's departments had a unique logo, citizens were not always able to identify which services the city was actually delivering."

WHAT'S IN A NAME

"We realized that the word 'Savannah' itself has a very positive message in it," Self said. "It's a beautiful name to visitors and to locals alike. Instead of minimizing that, the word 'Savannah' is in the center of the logo."

Deciding on an accompanying icon proved more taxing than choosing the main part of the logo. After considering numerous icons, the committee selected one of the city squares tipped on point because of its messages. The committee realized Savannah means different things to different people, however, the one thing unique to the city when compared to others is the public city squares.

"The central core of the Oglethorpe plan and the ward is the square, the open space, the green space, the sense of public," **Morrill** said. "For us it's the simplicity of the symbol and the allusion to the public city squares," Crockett said. "This is important because the square not only represents Savannah's beauty and livability, but it reminds us that the city has always been responsible for their care."

The official design brief explained that the shading of the city square "creates a positive forward motion." The use of green does justice to the countless parks and trees while emphasizing an environmental focus, and the feminine serif font of "Savannah" captures the welcoming spirit. "Even though the symbol is kind of a downtown symbol, those values radiate throughout our community," Self said, "not only in public land planning and public spacing but also with access and involvement."

A SOFT ROLLOUT

The city purposely did not plan an official unveiling of the new logo mainly with the taxpayers' best interest in mind. Instead, it opted for a soft rollout, which means using up supplies that contained the old logos and waiting until vehicles are replaced. From start to finish the rebranding cost totaled just less than $25,000, a cost virtually unheard of in most rebranding projects.

"We wanted to roll it out more organically so that people would subtly discover it," **Morrill** said. "Externally, the whole rebranding as an organization shows that we're one organization, we have core values that we work toward."

Public safety services such as the police and fire departments were not required to switch to the new logo because of their widely recognized existing logos. Appointed city officials such as the mayor and legal counsel will continue to use the more formal historic seal.

Brightwhitespace created a 42-page stylebook with specific guidelines for city employees to use in order to avoid relying on outside vendors for printing. The stylebook contains color variations of the logo in files formatted for Web and print and lists suggestions on how to use the graphics. With city employees having access to the files, they can print on an as-need basis instead of having to order in bulk.

"We thought there would be a lot of push back (internally) because it's difficult to implement change in any organization," Self said. "But to my knowledge it has been universally accepted because we rolled it out in a way for our people that made it as easy as possible for them to embrace it."

Augusta Chronicle, The (GA)
August 20, 2004

PROPOSAL BENEFITS TOURISM GATEWAY
Author: *Scott M. Larson and Mary Carr Mayle, Morris News Service*

SAVANNAH, Ga. - The tourist boulevard along Savannah's quaint River Street will expand soon with the construction of a $570 million mixed-use development that city officials say will transform a chunk of land - next door to downtown Savannah - that resembles a wasteland.

"If you look at it right now as you drive in, it's one of the gateways to Savannah, and it's ugly looking," said Assistant City Manager **Chris Morrill**. "There are not many large sites in the city so close to downtown where you could really do a quality development that could extend the Historic District."

In the past, the site has scared off developers because of extremely poor drainage.

City officials said that, in the past couple of years, six or seven developers have met with the city about the property but couldn't make anything work.

Mr. **Morrill** and John Hutton, the city's acting inspections director, are more optimistic about this proposal because three developers, including a group building a mall just to the south, are working together to address the big issues, such as drainage.

"All of a sudden, you are looking at doing something for one-third of the cost," Mr. Hutton said.

Savannah Morning News (GA)
October 15, 2002

SAVANNAH OFFICIALS TO STAY IN INDONESIA
THREE CITY EMPLOYEES TO CONTINUE GOODWILL VISIT DESPITE VIOLENCE.
Author: ***Savannah Morning News***

Friday, three Savannah city officials departed for Indonesia on a goodwill mission to offer their expertise to a sister city across the globe.

The next day, while the group was in midflight, a bomb exploded in a Bali nightclub.
Sunday, the Savannah trio landed in Indonesia as thousands of Westerners attempted to flee the island nation.

The three - acting Revenue Director Buddy Clay; Development Services Administrator John Hutton; and Public Development Coordinator Cindy Boyette - were given the option of returning, but decided to stay, despite a U.S. embassy order evacuating all nonessential personnel.

The city they are visiting, Yogyakarta, is located on the main island, they reasoned, and they are being accompanied at most times by Indonesian security. As an extra precaution, they have canceled planned media events to lower their visibility.

"They feel safe and they are going to stay," said Assistant City Manager **Chris Morrill**. "If the situation changes, we will get them out quickly." **Morrill**, City Manager Michael Brown and Finance Director Richard Evans visited Yogyakarta in March to establish the sister-city partnership as part of a program funded by the International City/County Managers Association. Hutton, Clay and Boyette will spend the week helping Yogyakarta improve its revenue system and inspections process.

Savannah Morning News (GA)
September 13, 2002

LOST SOLUTION MAY BE FOUND
NEGOTIATORS TENTATIVELY AGREE HOW TO SPLIT ABOUT $45 MILLION A YEAR, BUT THE COUNTY COULD BLOCK THE PLAN TODAY.
Author: *Jennifer Moroz,* ***Savannah Morning News***

After months of bitter back-and-forth, negotiators for Chatham County and eight municipalities have reached a tentative agreement on how to split up millions of dollars in sales-tax revenue. Under the proposed distribution of the Local Option Sales Tax (LOST), the cash-strapped county would get about $2.3 million a year more than it does under the current arrangement. County Commission Chairman Billy Hair and representatives of the municipalities, including Savannah, agreed the deal was a fair compromise. But some county commissioners say that it does not go far enough, and their voices count: The proposal needs the stamp of the majority on the nine-member commission to become final.

The commission is expected to consider the matter at its regularly scheduled meeting this morning. Pooler Mayor Buddy Carter was confident: "We've got five votes lined up." County Commissioner Frank Murray, one of two designated negotiators for the county, wasn't so certain.

"I don't think it's an offer that has the support to pass," he said.

Murray himself is against the proposal, which was hammered out over the last few days between Hair and Savannah Mayor Floyd Adams Jr. Representatives of the other seven municipalities, which have teamed up with Savannah in the negotiations, have signaled their approval. "I think we're getting close," Murray said, "but I don't feel the offer is where it needs to be right now."

Proceeds from the 1-percent sales tax represent a major source of revenue for local governments, which use the money to fund services - and lessen the property-tax burden on homeowners.
Over the next 10 years, the tax is expected to generate about $500 million. About 35 percent, or $175 million, of that comes from tourist spending. The proceeds are divided based on a number of criteria, including population, level of services provided by each government, and where the tax is generated. The first split is between the county and the municipalities as a group; the municipalities then decide how to divvy up their share. Under the current distribution formula, negotiated in 1995, the county gets 19.22 percent of the annual proceeds - about $8.3 million last year. Savannah gets the bulk at 68.73 percent - about $30 million last year. Over the last three months, county officials have argued that they have lost millions a year as a result of the 1995 deal, when they picked up the cost of housing municipal prisoners in return for a slightly larger piece of the sales-tax pie.

Commissioners, who just finished closing an $11.7 million hole in the county's operations budget, have blamed a large part of the county's ongoing financial woes on the prisoner issue.

Municipal officials countered that the county has overestimated its losses, using faulty figures to calculate prisoner costs.

Under the proposed new agreement, the county would get 17.6 percent of the sales-tax revenue - an amount equal to about $7.9 million next year. It would charge the municipalities $30 a day for each municipal prisoner housed in the county jail. The county would pay for municipal prisoners not yet bound over to the state court system after 28 days.

County officials estimate those prisoner fees will bring in an extra $2.7 million a year. "I think we've come to an agreement we can all live with," said Garden City administrator Tom Gates. "We tried to do what was fair and right and protect the tax to make sure it continues to exist." If an agreement is not finalized by Dec. 30, the tax expires. Up until last week, negotiations appeared deadlocked.

County officials had originally been asking for 18.6 percent of the tax proceeds, plus $45 a day for each municipal prisoner.

City negotiators in return offered the county a 15.51 percent cut of the sales-tax pie, with no help to maintain the county jail.

Savannah Assistant City Manager **Chris Morrill** said the proposed deal was especially sweet for the county. "They started at 18.6 percent and $45 (a day per prisoner) and look where this agreement is," **Morrill** said. "This is a good deal for them." The city, which last year got about $30 million of the proceeds and didn't have to pay to house its prisoners, would lose about $600,000 a year. **Morrill** said he did not yet know how officials would make up the lost revenue.

If county commissioners ratify the agreement, the municipalities would decide how to divide the remainder of the sales-tax proceeds. That division is usually based on population, which would give Savannah 67.37 percent, or about $30.3 million next year. Bloomingdale would get 1.37 percent; Garden City 5.78 percent; Pooler 3.2 percent; Port Wentworth 1.68 percent; Thunderbolt 1.2 percent; Tybee Island 1.74 percent; and Vernonburg .07 percent.

Savannah Morning News (GA)
February 1, 2002

SAVANNAH AGREES TO IMPROVE ACCESS
SETTLEMENT WITH JUSTICE DEPT. COMES ALMOST 2 YEARS AFTER AUDIT FOR COMPLIANCE WITH ADA
Author: *Kate Wiltrout*

Navigating Savannah's streets - and its bureaucracy - will soon get a little easier for disabled people. The city is one of 21 state and local governments that settled Wednesday with the U.S. Department of Justice regarding compliance with the Americans with Disabilities Act. Now almost 10 years old, the act requires that public facilities be made accessible to all people.

Chris Morrill, an assistant Savannah city manager, said the 11-point agreement should take about two years to complete. He estimated it would cost about $300,000, and that money would be found in the budget for the improvements.

Some of the changes are easier than others. For instance, all letters sent from city offices will have a central TTY telephone number on them, so hearing-impaired residents can contact the city.

City Council chambers will be fitted with listening systems for the hard-of-hearing, as will Grayson Stadium and the Martin Luther King Jr. Arena at the Civic Center.

Others are more labor intensive. The city agreed to physical modifications so that "parking, routes into buildings, entrances, doors, elevators, signage, public telephones, restrooms, dressing rooms, locker rooms, service counters, drinking fountains and swimming pools are accessible to people with disabilities."

Carol Bell, Central Services director, said the city would go beyond what's required.

"We don't really have any qualms with the agreement," she said. City Hall will get one wheel-chair accessible bathroom, though it was technically compliant already, with bathrooms in the nearby hospitality center on River Street, said city architect Thomas Perdue.

"God only knows whether the original City Hall even had bathrooms," Perdue said. "The city occupies a lot of buildings that are very historic and very old, and most of those are the ones we have problems with."

Savannah Morning News (GA)
November 13, 2001

NEW ASSISTANT CITY MANAGER ALL OVER THE MAP
Author: *Kate Wiltrout*

Chris Morrill started his job as assistant city manager for management and financial services in August. The position is new to him - but City Hall isn't. Before spending two years in South Africa working for the U.S. Agency for International Development, **Morrill** was Savannah's research and budget director for seven years. That job was interrupted with a two-year Peace Corps gig in Ukraine, where he advised the city of Lviv on finance, management and privatization issues. **Morrill**, who works out of an office in the top corner of City Hall, filled the spot left when Bob Bartolotta moved last October.

Here's what **Morrill** had to say during a break from last week's budget workshops:

What are some of your goals as an assistant city manager?

"First, to ensure that our city employees are well-trained, that they have a good work environment and they have the support services (they need). ... Next is to maintain the city's strong financial foundation, particularly through a possible recession."

He also wants to improve the city's use of technology, both for services and to get information out to citizens. Another top priority is getting citizens more engaged with local government.

How has your work overseas affected your views about local government?

"In the Peace Corps (in Ukraine), I experienced government at its worst, where it's designed to control and keep track of people rather than provide services. It really makes me want to focus on the positive role government can play. In South Africa, post-apartheid, it was seeing that to really have democracy you have to have citizen involvement. It impressed me how diligent they were at that."

How do you think Savannah changed while you were in Africa the past two years?

"I think what I saw coming back was a lot more economic development, downtown and in the neighborhoods. Areas like off East Broad Street that I thought were hopeless have all of a sudden come back. ... I personally have seen a much greater police presence in my own neighborhood (Ardsley Park), and the city seems a bit cleaner."

What can Savannah residents expect if the economy goes into a prolonged recession?
"If the recession is longer term and systemic, then we really need to look at prioritizing the services we provide and actively look at our revenue sources. I think an increase in property tax would probably be a last resort."

Savannah Morning News (GA)
June 8, 2001

SAVANNAH HIRES NEW ASSISTANT CITY MANAGER
Author: *Bret Bell*

Chris Morrill has spent much of the past five years helping to privatize the Ukraine and create a new financial framework for local governments in post-apartheid South Africa.

With that kind of background, City Manager Michael Brown figures he will have little trouble coming up with a budget for little old Savannah. Brown announced Thursday that he hired **Morrill**, who helped create annual budgets for the city of Savannah for the better part of a decade, as assistant city manager for management and financial services.

Considered one of the top three most powerful positions in city government, **Morrill** fills a position that had remained vacant since October, when Bob Bartolotta left to run the city of Jupiter, Fla. Finance Director Richard Evans served as assistant city manager in the interim.

Morrill will start work Aug. 13 with a $98,000 annual salary.

While working for the city from 1990-1992, and again, from 1994-1999, **Morrill** led an eight-member team that prepared and monitored a $170 million budget.

"**Chris** made many improvements in our budget and financial management systems, as well as in the quality and clarity of our presentation and public information materials," Brown said.

In his new position, **Morrill** will oversee 10 city departments, including vehicle maintenance, finance, human resources, purchasing, central services and parking services.

Bartolotta drew some heat from city employees during his tenure when Vehicle Maintenance Department employees claimed abuse and unsafe working conditions. The department's director later resigned during a city investigation.

Some of those worker complaints led to the unionization of service employees earlier this year.

CHRIS MORRILL'S RESUME

WORK HISTORY
1999-present: senior municipal policy adviser for the National Treasury of South Africa -- United States Agency for International Development

1990-1992, 1994-1999: research and budget director, city of Savannah

1997-2000: fellow, Kellogg National Leadership Program -- studied community building in countries throughout the world

1992-1994: Peace Corps volunteer -- advised the city of Lviv, Ukraine, on finance, management and privatization issues

1988-1990: senior management analyst, city of Savannah

1986-1988: senior budget analyst, Catawba County, N.C.

1984-1985: downtown project manager, Lynn, Mass.

EDUCATION

Master of Public Administration, 1987 -- University of North Carolina, Chapel Hill

Bachelor of Arts, 1984, political science major -- College of the Holy Cross, Worcester, Mass.

Certificate in county administration, certificate in budgeting and financial planning -- North Carolina Institute of Government

Columbus Ledger-Enquirer (GA)
October 14, 1996

GEORGIA BRIEFS
Author: *From wire reports*

City to be compensated for Olympic security costs

SAVANNAH -- Savannah will receive $57,308 from the Legislature to compensate for nonpersonnel security costs incurred during Olympic yachting events.

``The request was passed by the state legislature earlier on, and the governor's office gave it final approval late last week," said state Rep. Tom Bordeaux, D-Savannah. ``The city is getting everything it asked for, which is a good sign for Savannah and its planning department."

The money is coming from a $500,000 governor's discretionary grant fund approved by the Legislature so cities hosting satellite Olympic venues -- such as Savannah with yachting or Columbus with softball -- could be compensated for security costs.

Savannah's budget director, **Chris Morrill**, said the money is welcome, even though all Olympic costs are already covered by the city's $88.5 million general fund budget for 1996.

``It's like getting a bonus at work -- you don't go out and spend it right away," **Morrill** said.

ACOG already paid Savannah $290,000 to help defray police overtime in a deal negotiated earlier this year by Mayor Floyd Adams Jr. The city still incurred an additional $244,000 in police overtime during the Games, although all of it was budgeted by city officials.

Savannah requested compensation for computers, police vehicle maintenance, bulletproof vests and extra barricades and other items needed around the venues.

Research Completed by: Vanessa Garner
Colin Baenziger & Associates

Appendix D

Sample Survey
Savannah City Manager Quality Survey

Sample City Manager Quality Survey

Q1 During the past three years, how often have you attended or viewed a city council or city commission meeting (select only one)

Answered: 449 Skipped: 1

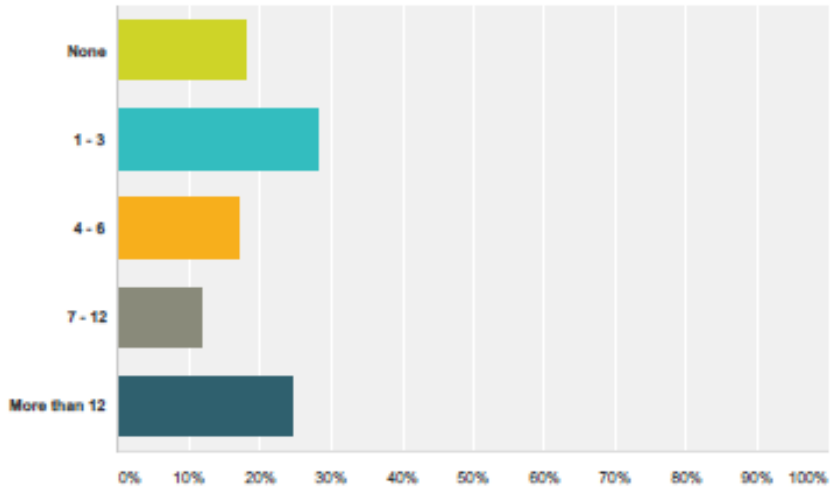

Answer Choices	Responses	
None	18.26%	82
1 - 3	28.29%	127
4 - 6	16.93%	76
7 - 12	11.80%	53
More than 12	24.72%	111
Total		449

Sample City Manager Quality Survey (continued)

Q2 How do you keep informed of City issues and concerns (select all that apply)

Answered: 450 Skipped: 0

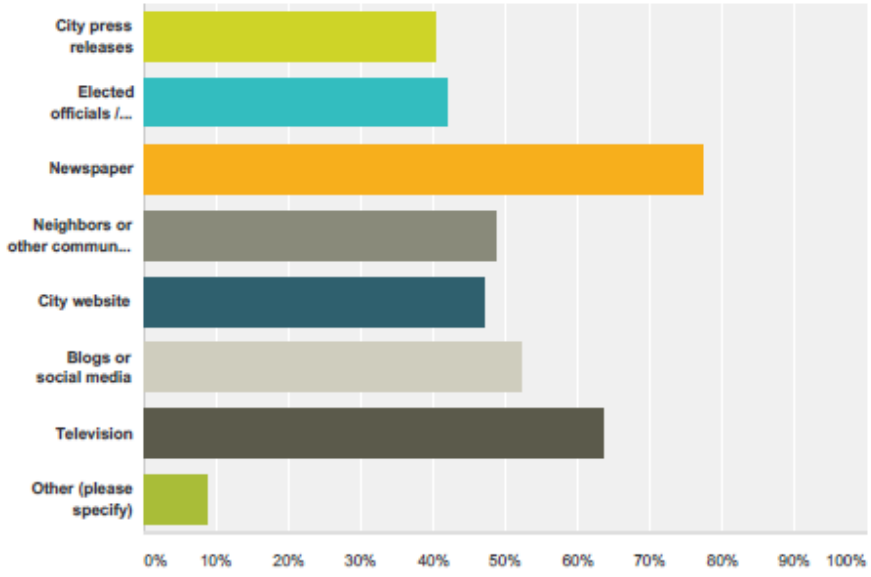

Answer Choices	Responses	
City press releases	40.22%	181
Elected officials / city staff	42.00%	189
Newspaper	77.56%	349
Neighbors or other community members	48.67%	219
City website	47.11%	212
Blogs or social media	52.22%	235
Television	63.78%	287
Other (please specify)	8.67%	39
Total Respondents: 450		

Sample City Manager Quality Survey (continued)

Q3 Please rank each of the following issues that the City Manager should address (5 being the most important and 1 as not important)

Answered: 448 Skipped: 2

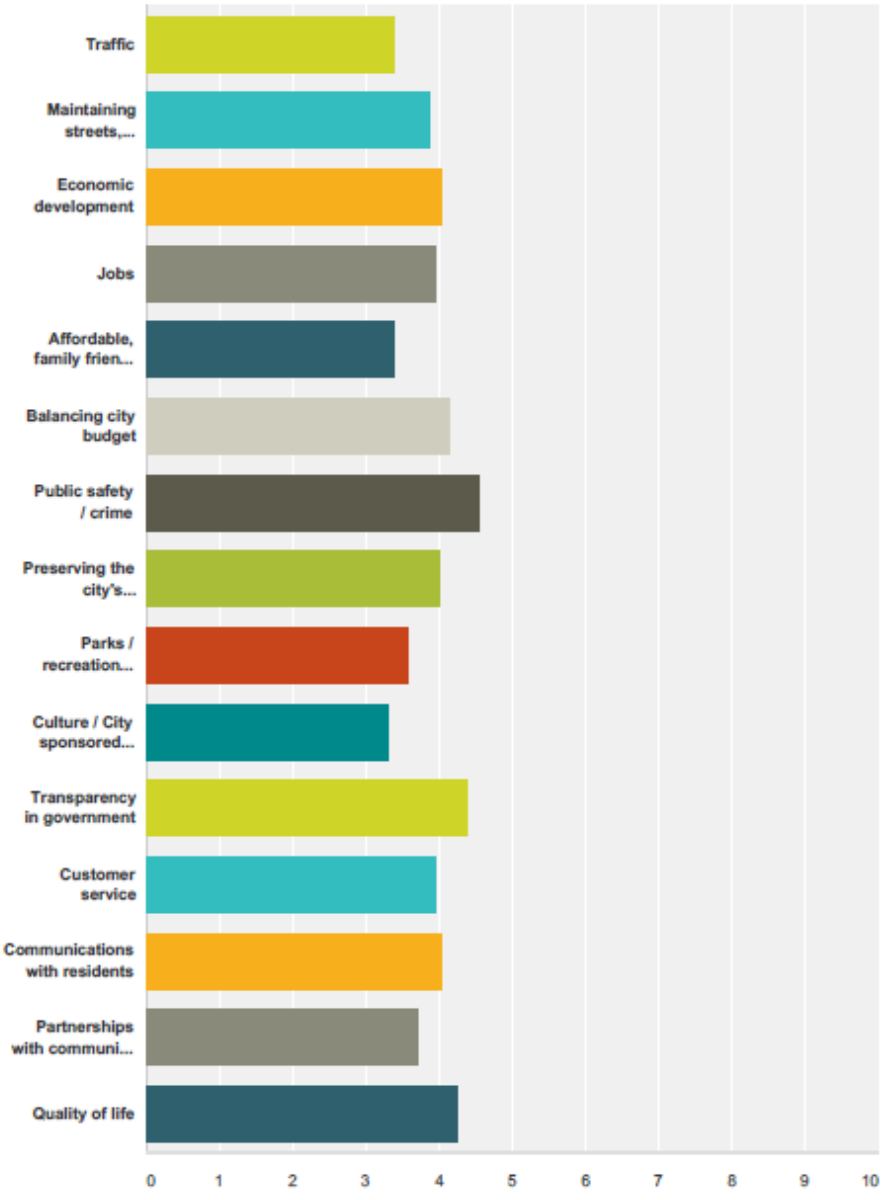

Sample City Manager Quality Survey (continued)

Savannah City Manager Quality Survey — SurveyMonkey

Traffic	6.59% 28	12.47% 53	35.06% 149	24.00% 102	21.41% 91	0.47% 2	425	3.41
Maintaining streets, buildings, and other public facilities	2.30% 10	7.36% 32	23.22% 101	33.79% 147	32.64% 142	0.69% 3	435	3.88
Economic development	6.19% 27	6.42% 28	13.76% 60	22.25% 97	48.85% 213	2.52% 11	436	4.04
Jobs	5.61% 24	7.71% 33	16.82% 72	22.66% 97	44.86% 192	2.34% 10	428	3.96
Affordable, family friendly housing	10.39% 45	13.39% 58	28.41% 123	19.40% 84	27.48% 119	0.92% 4	433	3.41
Balancing city budget	3.63% 16	5.22% 23	13.83% 61	27.89% 123	47.62% 210	1.81% 8	441	4.13
Public safety / crime	3.83% 17	2.03% 9	5.63% 25	10.36% 46	74.77% 332	3.38% 15	444	4.55
Preserving the city's character	5.68% 25	5.68% 25	17.50% 77	23.41% 103	46.36% 204	1.36% 6	440	4.00
Parks / recreation programs	3.90% 17	7.57% 33	33.94% 148	32.11% 140	21.56% 94	0.92% 4	436	3.60
Culture / City sponsored events	7.74% 34	12.98% 57	35.99% 158	28.02% 123	14.81% 65	0.46% 2	439	3.29
Transparency in government	3.61% 16	2.71% 12	10.84% 48	14.67% 65	65.24% 289	2.93% 13	443	4.39
Customer service	4.52% 20	6.79% 30	20.59% 91	24.89% 110	42.31% 187	0.90% 4	442	3.95
Communications with residents	4.31% 19	4.76% 21	18.37% 81	26.53% 117	44.90% 198	1.13% 5	441	4.04
Partnerships with community / schools / business	8.18% 36	8.41% 37	22.50% 99	24.32% 107	35.68% 157	0.91% 4	440	3.72
Quality of life	4.56% 20	2.96% 13	12.07% 53	20.96% 92	56.72% 249	2.73% 12	439	4.26

Sample City Manager Quality Survey (continued)

Q4 Please rank each of the following skills the next City Manager should have (5 being the most important and 1 as not important)

Answered: 449 Skipped: 1

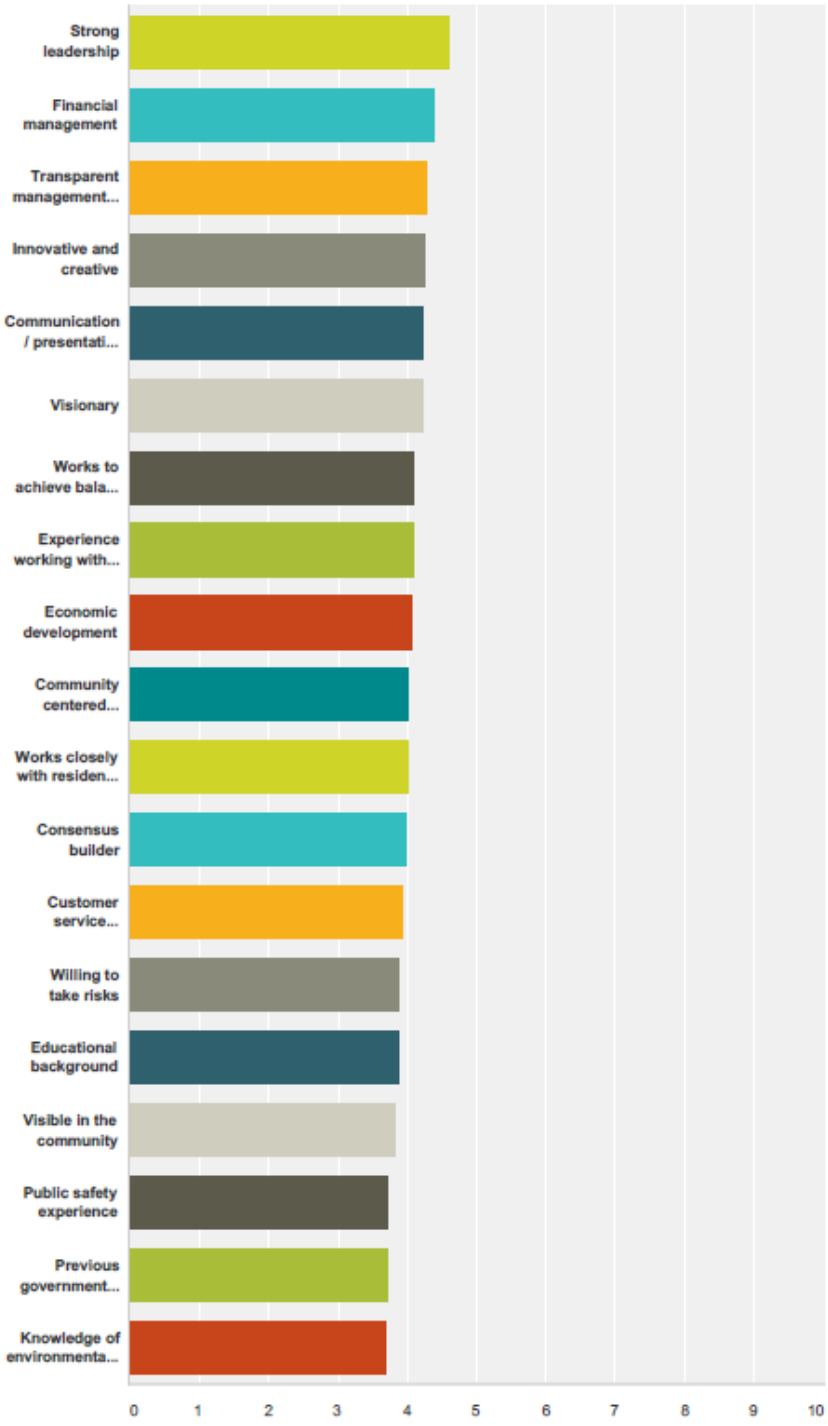

Sample City Manager Quality Survey (continued)

Savannah City Manager Quality Survey — SurveyMonkey

	1	2	3	4	5	N/A	Total	Weighted Average
Strong leadership	4.51% 20	1.13% 5	3.39% 15	10.61% 47	79.01% 350	1.35% 6	443	4.61
Financial management	3.38% 15	3.15% 14	8.33% 37	20.72% 92	63.06% 280	1.35% 6	444	4.39
Transparent management style	3.83% 17	2.25% 10	13.06% 58	20.50% 91	58.78% 261	1.58% 7	444	4.30
Innovative and creative	4.10% 18	2.28% 10	14.81% 65	20.27% 89	57.86% 254	0.68% 3	439	4.26
Communication / presentation skills	3.62% 16	3.39% 15	13.12% 58	25.57% 113	53.62% 237	0.68% 3	442	4.23
Visionary	5.22% 23	2.95% 13	12.70% 56	20.63% 91	57.37% 253	1.13% 5	441	4.23
Works to achieve balance among all community interests: residents, businesses and developers	2.95% 13	6.35% 28	15.19% 67	26.98% 119	47.39% 209	1.13% 5	441	4.11
Experience working with diverse communities	6.07% 27	5.39% 24	14.16% 63	21.12% 94	52.36% 233	0.90% 4	445	4.09
Economic development	4.57% 20	5.25% 23	14.16% 62	28.54% 125	45.89% 201	1.60% 7	438	4.06
Community centered approach	4.78% 21	5.01% 22	17.31% 76	27.56% 121	44.65% 196	0.68% 3	439	4.03
Works closely with residents and seeks their viewpoint	4.08% 18	4.31% 19	17.46% 77	31.75% 140	41.72% 184	0.68% 3	441	4.03
Consensus builder	4.31% 19	6.12% 27	20.63% 91	24.04% 106	43.54% 192	1.36% 6	441	3.98
Customer service orientation	5.24% 23	5.92% 26	18.00% 79	28.93% 127	41.00% 180	0.91% 4	439	3.95
Willing to take risks	5.25% 23	5.02% 22	23.74% 104	26.26% 115	38.81% 170	0.91% 4	438	3.89
Educational background	3.64% 16	7.05% 31	22.95% 101	27.05% 119	37.27% 164	2.05% 9	440	3.89
Visible in the community	4.58% 20	7.09% 31	24.71% 108	26.32% 115	36.61% 160	0.69% 3	437	3.84
Public safety experience	4.49% 20	8.31% 37	26.97% 120	27.42% 122	31.69% 141	1.12% 5	445	3.74
Previous government experience	8.07% 36	7.17% 32	24.22% 108	23.54% 105	35.43% 158	1.57% 7	446	3.72
Knowledge of environmental issues	7.06% 31	8.43% 37	25.28% 111	24.83% 109	33.26% 146	1.14% 5	439	3.70

Sample City Manager Quality Survey (continued)

Q5 Is there anything else you want to share about what you would like to see in our next City Manager?

Answered: 230 Skipped: 220

Put the NEEDS of residents of the City of Savannah FIRST! Before the tourists, the business developers, etc.
A dedication to addressing the gun violence in our city.
More visibility to the community as a whole including the unincorporated areas, not just to specific groups.
Interest in building a bike and pedestrian friendly city.
A major interest in the environment and sustainability of it.
A familiarity with and support for Complete Streets.
Good working relationship with citizens and police. Ability to work to preserve neighborhoods. Savannah is not just for tourists!
Highly ethical business practices. High moral values and integrity. Verifiable track record of previous accomplishments in government or business.
Increasing mobility using plans like "Complete Streets". Making public transportation available for all in getting around the city (shuttles); making it safe for biking; better recycling agenda (they're composting in San Francisco these days).
I'd like to see the City Manager riding his bike to work or walking to work and incorporate a plan to always include sidewalks and bike paths in infrastructure for existing and especially for new development.
Someone who will place traffic calming and safe streets as a top priority. We have virtually no traffic enforcement (60 mph on E 52nd, my street, is not uncommon and there is NO police enforcement).
We need to start making Savannah A Bike City friendly and make better changes for cyclists safety , so that we won't have another horrible accident like on BRAG again.
Commitment to transportation issues in traffic calming through downtown for pedestrians, bicycles, cars (speeding) and public transportation. Too many accidents, by any of these modes of transportation, are completely avoidable or at least able to be lessened by enforcement of existing laws or the development of prevention measures.
Focus on the planning, development and maintenance of complete streets.
Previous experience in a city with similar challenges would be ideal, along with a demonstrated ability to manage large public projects from start to finish.
He or she must be someone the city staff will respect and find good to work for. I guess this is having the skills that most employees like to see in their employer. The new City Manager should also have skills in delegating responsibility and giving credit to others for their successes.

*16 samples responses from the 230 received.

Appendix E

St. Johns County, FL Resolution Thanking CB&A for Its Outstanding Service

RESOLUTION NO. 2007-231

A RESOLUTION OF THE COUNTY COMMISSION OF ST. JOHNS COUNTY, FLORIDA, THANKING COLIN BAENZIGER & ASSOCIATES FOR ITS OUTSTANDING EFFORTS IN CONDUCTING THE EXECUTIVE SEARCH FOR THE COUNTY'S NEW ADMINISTRATOR; AND PROVIDING AN EFFECTIVE DATE.

WHEREAS, St. Johns County retained Colin Baenziger & Associates (CB&A) to identify and recommend strong candidates to be the County Administrator;

WHEREAS, CB&A's staff worked diligently to find and produce excellent candidates, and then provided the County Commission with comprehensive materials concerning the candidates' aptitude, experience, background, complete and thorough interviews, references, extensive checks of criminal, civil and financial history, verification of employment and education, and exhaustive reviews of Internet and newspaper archives of these candidates; and

WHEREAS, CB&A's process was completely open, fair and unbiased and was extremely well received by the County Commission, county staff, the press, and the public; and

WHEREAS, the County Commission wishes to express its gratitude to Colin Baenziger & Associates for its efforts on behalf of the county;

NOW BE IT THEREFORE RESOLVED BY THE COUNTY COMMISSION OF ST. JOHNS COUNTY, FLORIDA AS FOLLOWS:

Section 1: Recitals. The preceding recitals are true and correct and are incorporated herein by this reference.

Section 2: Acknowledgement. The County Commission wishes to express its sincere appreciation and gratitude to Colin Baenziger & Associates for its outstanding work and effort in assisting the county in finding its County Administrator.

Section 3: Effective Date. This resolution shall take effect immediately upon adoption.

PASSED AND ADOPTED by the Board of County Commissioners of St. Johns County, Florida, this 21 day of August, 2007.

ATTEST: Cheryl Strickland, Clerk

By: Pam Hatterman
Deputy Clerk

BOARD OF COUNTY COMMISSIONERS
ST. JOHNS COUNTY, FLORIDA

By: Ben Rich
Ben Rich, Chairman

Rendition Date: 8/23/07

Appendix F

Comments from Dale Martin on CB&A's Vetting Process

Fernandina Observer™
A JOURNAL OF NEWS AND OPINION

Weekly comments from Dale Martin

By Dale Martin, City Manager, City of Fernandina Beach
March 18, 2016 1:00 a.m.

The vetting process employed by Mr. Colin Baenziger following my application to the City of Fernandina Beach was the most thorough review of my career, credentials, and references that I have ever experienced. In the months leading to my appointment here, I was interviewed in several other communities for similar City Manager positions. Despite getting to the interview stage in those communities, none of my references ever indicated to me that they had been contacted. As part of the selection process here, I was required to provide an exhaustive list of references, some very specific, such as my current Town Attorney, auditor, Chamber of Commerce, etc. To the best of my knowledge, every single reference provided was contacted.

The historic information provided to the City Commission for each candidate was extensive. Reading through the older newspaper articles rekindled so many memories- the personalities and issues from earlier days illustrate some peaks and valleys over the past twenty years. It has been a wonderful ride.

Note: Mr. Martin reminisces about his career for the remainder of the article. The full article can be found at:

http://fernandinaobserver.com/2016/03/18/weekly-comments-from-dale-martin-5/#more-65218

CITY OF STUART, FLORIDA
AGENDA ITEM REQUEST
CITY COMMISSION

Meeting Date: 5/22/2017 **Prepared by:** Sam Amerson, PE - Public Works Director

Title of Item:
RESOLUTION No. 56-2017; A RESOLUTION OF THE CITY COMMISSION OF THE CITY OF STUART, FLORIDA AUTHORIZING BUDGET AMENDMENT #8 TO THE 2016-2017 STORMWATER UTILITY FUND; APPROPRIATING AND AUTHORIZING THE EXPENDITURE OF FUNDS FOR THE STORMWATER UTILITY BILLING ROLL UPDATE, PROVIDING AN EFFECTIVE DATE, AND FOR OTHER PURPOSES. (RC)

Summary Explanation/Background Information on Agenda Request:
In 1994, the City of Stuart implemented a Stormwater Utility which charges user fees to residents, businesses and property owners to fund the administrative, operation and maintenance, and capital costs of the City's Stormwater Management Program.

Over the ensuing two decades, many changes have occurred which have impacted stormwater utility revenue generation. These changes include major annexations, development of previously vacant property and modifications to previously developed parcels. Parcels, the entity upon which stormwater utility revenue is based, have been subdivided or combined, and parcel land use designations have been modified. While various modifications to the billing roll have taken place over the years, since the stormwater utility's inception, a thorough update of the roll has not taken place, resulting in the likelihood that potential revenue has been unbilled or under billed.

In 2013, Hazen and Sawyer completed a review of the City's Stormwater Utility that focused on a variety of financial elements including billing rate sufficiency, identification of service area parcels missing from the current billing roll due to annexation or other causes, revenue reductions due to dormant utility accounts and payment delinquencies, and a review of alternative stormwater billing strategies. The associated report identified several areas where the City might make financial and operational adjustments to the Stormwater Utility.

This proposed stormwater billing roll review and update will include a series of tasks which will reclassify service area parcels for flat or non-flat fee assignment, and measure and recalculate ERU assignments for non-flat fee residential and non-residential parcels. This process may uncover currently untapped revenue and would support the migration to a non-ad valorem assessment method of revenue collection. The City's current method of stormwater revenue collection places a stormwater fee item alongside water and wastewater collection fees on the monthly utility bill. Additionally, we wish to evaluate placing the utility fee on the Martin County tax bill by utilizing the uniform method of non-ad valorem assessment as an alternative method of stormwater utility revenue collection. Attached is a proposal provided by Hazen and Sawyer which outlines a scope of services and fee to provide these services.

Funding Source:
Stormwater Utility, Current Operating Budget
Action will require Budget Amendment to reallocate funds

FROM: 1810 – 531 Engineering/GIS Updates	$15,000.00
FROM: 1810 – 534 Exotics Removal	$35,000
FROM: 1810 – 546 Baffle Box Retrofit	$8,100.00
	$58,100.00

TO: 1810-531 Professional Services $58,100.00

Recommended Action:
Adopt Resolution No. 56-2017

ATTACHMENTS:

	Description	Upload Date	Type
🗋	R56-2017; Budget Amendment #8, Stormwater Utility Billing Roll Update	5/15/2017	Resolution add to Y drive
🗋	Transmittal letter from Hazen and Sawyer	5/10/2017	Attachment
🗋	Hazen and Sawyer Proposal	5/10/2017	Attachment
🗋	Public Works CCNA Exemption Memo-Procurement Concurrence	5/15/2017	Attachment

BEFORE THE CITY COMMISSION
CITY OF STUART, FLORIDA

RESOLUTION NUMBER 56-2017

RESOLUTION No. 56-2017; A RESOLUTION OF THE CITY COMMISSION OF THE CITY OF STUART, FLORIDA AUTHORIZING BUDGET AMENDMENT #8 TO THE 2016-2017 STORMWATER UTILITY FUND; APPROPRIATING AND AUTHORIZING THE EXPENDITURE OF FUNDS FOR THE STORMWATER UTILITY BILLING ROLL UPDATE, PROVIDING AN EFFECTIVE DATE, AND FOR OTHER PURPOSES.

* * * * *

BE IT RESOLVED BY THE CITY COMMISSION OF THE CITY OF STUART, FLORIDA that:

SECTION 1: The 2016-2017 Year Budget of the Stormwater Utility Fund of the City of Stuart, Florida, being Resolution No. 56-2017 of the City Commission of the City of Stuart, Florida, as amended, hereinafter the "Budget," is hereby further amended, as follows:

FROM: 1810 – 531 Engineering/GIS Updates	$15,000.00
FROM: 1810 – 534 Exotics Removal	$35,000
FROM: 1810 – 546 Baffle Box Retrofit	$8,100.00
	$58,100.00
TO: 1810-531 Professional Services	$58,100.00

R56-2017, BA#8
Stormwater Utility Billing Roll Update

This is an authorization of the City Commission of the City of Stuart, Florida authorizing budget amendment #8 to the FY 2016-2017 Annual Budget to appropriate and expend funds for the Stormwater Utility Billing Roll Update.

SECTION 2: Except as amended hereby, the FY 2016-2017 Annual Budget shall remain in full force and effect.

SECTION 3: This resolution shall take effect on adoption.

Commissioner _____offered the foregoing resolution and moved its adoption. The motion was seconded by Commissioner _____ and upon being put to a roll call vote, the vote was as follows:

	YES	NO	ABSENT
TOM CAMPENNI, MAYOR			
TROY A. MCDONALD, VICE MAYOR			
KELLI GLASS LEIGHTON, COMMISSIONER			
JEFFREY A. KRAUSKOPF, COMMISSIONER			
EULA R. CLARKE, COMMISSIONER			

ADOPTED this 22nd day of May, 2017.

ATTEST:

_____
CHERYL WHITE
CITY CLERK

_____
TOM CAMPENNI
MAYOR

APPROVED AS TO FORM
AND CORRECTNESS:

_____
MICHAEL MORTELL
CITY ATTORNEY

Hazen and Sawyer
2101 NW Corporate Blvd., Suite 301
Boca Raton, FL 33062 • 561-997-8070

To: **CITY OF STUART**
PUBLIC WORKS DEPARTMENT

Address: 121 SW Flagler Avenue
Stuart, Florida 34994

Attention: Sam Amerson

Date: May 9, 2017

Job: Stormwater Utility Billing Roll
Update Scope of Services

We Are Sending You:
☒ **Herewith** ☐ Under Separate Cover
☐ Reports ☐ Tracings ☐ Prints
☐ Shop Drawings ☐ Specifications
☐ Samples ☐ Contracts ☒ Other

Sent By:
☐ Blue Printer ☐ Hold for Pickup
☐ Hand Delivered ☐ Mail
☐ UPS ☐ Federal Express
☒ via Electronic Delivery

No.	DATE	DESCRIPTION
1	May 9, 2017	Stormwater Utility Billing Roll Update Scope of Services

Remarks:

Transmitted:
☒ **At Your Request**
☐ For Your Information
☐ For Your Comments
☐ For Your Approval
☐ For Distribution
☐ For Correction
☐ Furnish as Submitted
☐ Furnish as Corrected
☐ Revise and Resubmit

Copies to:

File:

Very truly yours,
HAZEN AND SAWYER

By:
Robert B. Taylor, Jr. PE

City of Stuart
Stormwater Billing Roll Update
Scope of Services

PROJECT BACKGROUND

In 1994, the City of Stuart implemented a Stormwater Utility which charges user fees to residents, businesses and property owners to fund the administrative, operation and maintenance, and capital costs of the City's Stormwater Management Program. Over the ensuing two decades, many changes have occurred which have impacted stormwater utility revenue generation. These changes include major annexations, development of previously vacant property and modifications to previously developed parcels. Parcels, the entity upon which stormwater utility revenue is based, have been subdivided or combined, and parcel land use designations have been modified. While various modifications to the billing roll have taken place over the years, since the stormwater utility's inception, a thorough update of the roll has not taken place, resulting in the likelihood that potential revenue has been unbilled or under billed. In 2013, Hazen and Sawyer completed a review of the City's Stormwater Utility that focused on a variety of financial elements including billing rate sufficiency, identification of service area parcels missing from the current billing roll due to annexation or other causes, revenue reductions due to dormant utility accounts and payment delinquencies, and a review of alternative stormwater billing strategies. The associated report identified several areas where the City might make financial and operational adjustments to the Stormwater Utility.

This proposed stormwater billing roll review and update will include a series of tasks which will reclassify service area parcels for flat or non-flat fee assignment, and measure and recalculate ERU assignments for non-flat fee residential and non-residential parcels. This process may uncover currently untapped revenue and would support the migration to a non-ad valorem assessment method of revenue collection. The City's current method of stormwater revenue collection places a stormwater fee item alongside water and wastewater collection fees on the monthly utility bill. The City has indicated that it wishes to consider placing the utility fee on the Martin County tax bill by utilizing the uniform method of non-ad valorem assessment as an alternative method of stormwater utility revenue collection. Accordingly, the Consultant will execute tasks within the following scope of services.

SCOPE OF SERVICES

Task 1 – Billing Method Evaluation

1. Consultant will develop a comparative evaluation of two methods of Stormwater Utility revenue collection, inclusion on the water/sewer utility bill, as is currently being practiced by the City, and as a non-ad valorem assessment on the annual Martin County tax bill. The evaluation will consider both financial costs and benefits associated with each method, as well as other aspects such as the ease of maintaining an up-to-date billing assessment roll. Consultant will prepare a draft and final technical memorandum summarizing the results of the evaluation.

Task 2 – Initial Non-ad Valorem Assessment Administrative Assistance

1. The process for implementing the initial assessment through the Martin County Tax Collector will require that the City address several statutory milestones with respect to public notices and Commission resolutions. Consultant will assist the City in the preparation of the following.

    a. A resolution for adoption by the City Commission at a public hearing prior to January 1 of the subsequent year that clearly states its intent to use the uniform method of collecting such assessment.

    b. A Notice of Intent to use the uniform method for collecting the assessment to be advertised weekly in a newspaper of general circulation for four consecutive weeks preceding the hearing.

    c. A City Commission resolution for adoption of the non-ad valorem assessment roll at a public hearing held between January 1 and September 15.

    d. A notice of the public hearing that must be posted by first-class mail and by publication in a newspaper generally circulated within the county.

Task 3 – Billing Roll Update

Consultant will evaluate and assemble data necessary for establishing stormwater utility fees/assessments.

1. Meet with each of the following departments within the City and Martin County to review existing data records needed to establish a billing database.

    a. Property Appraiser's Office

    b. Public Works / Engineering/Finance Department

2. Acquisition and processing of Martin County Property Appraiser parcel data.

    a. Consultant will acquire the following data from the Martin County Property Appraiser:

        1) Current GIS parcel polygons for Martin County

        2) Current Real Master parcel data file or other parcel data file providing:

            a) Property Control Number (PCN) to link records to parcel polygons

            b) Jurisdiction field indicating location within the City of Stuart (JurNum)

            c) Property Class and Property Class Description fields indicating the current land use class assigned to each parcel (PCDesc, PropClas)

        3) Current City of Stuart GIS boundary polygon(s)

4) Current aerial photography for Martin County in .sid, or georeferenced .jpg or .gif raster images

b. Consultant will acquire the following data from the City of Stuart's Public Works or Finance Department.

1) Current utility billing database in .xlsx (Microsoft Excel) or .csv (comma separated value) format with updated Parcel Control Number field

3. From the Martin County GIS parcel polygon data, Consultant will select parcels falling within the City of Stuarts jurisdiction using either a jurisdiction field within the Martin County Property Appraser's Real Master or other parcel data file, or geographically using the City's GIS boundary file.

4. Consultant will separate parcels falling within the City of Stuart's jurisdiction into categories that are consistent with the City's current billing classifications, including:

a. Single Family (residential)

b. Duplex (residential)

c. Half duplex (residential)

d. Unimproved residential

e. Multifamily (residential) and non-residential

5. Parcels falling into one of classifications a through d, above will be assigned a stormwater ERU unit consistent with that classification as provided in the City's Code of Ordinances.

6. Parcels classified as multifamily residential or non-residential (approximately 1,200) will have their impervious areas estimated through GIS measurement using electronic geo-referenced aerial photography. Overall parcel area for these parcels will be generated automatically from GIS. A stormwater ERU will be assigned to each measured parcel using the City's formula for Effective Impervious Area: ((total area – impervious area)*0.15 + impervious area) / 3,707 sq.ft./ERU.

7. An ERU assignment spreadsheet providing parcel information including PCN, owner name and address, property class, parcel total and impervious area (where applicable) and assigned ERU will be created and submitted to City for review.

8. Consultant will coordinate with the Martin County Tax Collector to determine the appropriate format and procedures governing the submission of non-ad valorem assessment rolls for collection.

9. Consultant will migrate information contained within the ERU assignment spreadsheet completed under Item 7 to an electronic medium with the content and format required by the Martin County Tax Collector.

10. Consultant will prepare draft and final technical memorandum summarizing the assessment roll development process.

PROJECT DELIVERABLES

- Draft and final technical memorandum summarizing the results of the billing method evaluation.
- Draft Resolution of Intent to use the Uniform Method of Non-ad valorem Assessment for the collection of stormwater utility fees.
- Draft resolution for adoption of the non-ad valorem assessment roll.
- Two copies of the parcel ERU assignment spreadsheet will be provided on DVD.
- Preliminary and Final stormwater assessment roll.
- Draft and final technical memorandum summarizing the results of the assessment roll development efforts undertaken in Task 3.

PROJECT SCHEDULE

Task	Time for Completion (from NTP)
Task 1 – Billing Method Evaluation	4 weeks
Task 2 – Initial Non-Ad Valorem Admin Assistance	12 weeks
Task 3 – Billing Roll Update	12 weeks

PROJECT BUDGET

As shown below, compensation for these services will be a maximum of $58,117, not to be exceeded without written authorization.

Task	Cost
Task 1 – Billing Method Evaluation	$4,068
Task 2 – Initial Non-Ad Valorem Admin Assistance	$3,918
Task 3 – Billing Roll Update	$49,631
Direct Expenses	$ 500
Total Lump Sum	**$58,117**

CITY OF STUART

2017 STORMWATER UTILITY ROLL UPDATE

CONSULTANT'S PERSONNEL HOURLY RATE SCHEDULE

Category	Rate
Project Director	$242
Project Manager	$175
Associate	$165
Sr. Principal Engineer/Scientist	$150
Principal Engineer/Scientist	$140
Assistant Engineer	$95
Senior Designer	$120
Designer	$95
Administrative Assistant	$75

PUBLIC WORKS MEMORANDUM

TO: Lenora Darden Procurement Manager

FROM: Sam Amerson, Public Works Director

DATE: May 12, 2017

REF: Stormwater Utility Billing Roll Update
Request for Exemption from CCNA Process

The Public Works Department has requested a proposal from Hazen and Sawyer, P. C. to provide professional financial services related to the city stormwater utlility billing rates and structure. Specifically, the scope of work includes:

1. **Billing Method Evaluation;** a comparative evaluation of two methods of stormwater revenue collection
2. **Initial Non-advalorem Assessment Administrative Assistance;** Development of process for implementing the initial assessment through the Martin County Tax Collector
3. **Billing Roll Update;** Evaluate and assemble the data necessary for establishing stormwater fees and assessments including GIS recalculation of all non-residential parcels (approximately 1200).

The scope of this work is financial in nature, therefor I am requesting concurrence that procurement of these services meets the exemtion from CCNA procurement process.

The Finance Director and Assistant Finance Director reviewed the scope of services, and both agree the scope indicates a financial professional service which is exempt from the competitive purchasing process per Section 2-305 of City Code, at the maximum cost of $58,117 as per attached email dated 5/3/17.

.

A copy of the scope of work provided by Hazen and Sawyer is attached.

☒ Approved ☐ Disapproved

Services are exempt from the competitive process as per Section 2-305 (6) Financial

L Darden

Procurement Manager

5/12/17
Date

CITY OF STUART, FLORIDA
AGENDA ITEM REQUEST
CITY COMMISSION

Meeting Date: 5/22/2017 **Prepared by:** Sam Amerson, PE - Public Works Director

Title of Item:

RESOLUTION No. 59-2017; A RESOLUTION OF THE CITY COMMISSION OF THE CITY OF STUART, FLORIDA AUTHORIZING THE MAYOR TO EXECUTE A LETTER SUPPORTING THE MARTIN COUNTY BOARD OF COUNTY COMMISSIONERS' APPLICATION FOR A PADDLING TRAIL DESIGNATION THROUGH THE FLORIDA DEPARTMENT OF ENVIRONMENTAL PROTECTION (FDEP) OFFICE OF GREENWAYS AND TRAILS; PROVIDING AN EFFECTIVE DATE; AND FOR OTHER PURPOSES. (RC)

Summary Explanation/Background Information on Agenda Request:

The Martin County Board of County Commissioners is making an application for a Paddling Trail Designation through the FDEP Office of Greenways and Trails. The Martin MPO staff has requested a letter from the City of Stuart supporting the application.

A letter of support for the Mayor's signature is attached.

Funding Source:

N/A

Recommended Action:

Adopt Resolution Number 59-2017

ATTACHMENTS:

	Description	Upload Date	Type
🗋	R59-2017; Paddling Trail Designation, St. Lucie River South Fork and the Indian River Lagoon	5/15/2017	Cover Memo
🗋	Paddling Trail Designation - Letter of Support	5/15/2017	Attachment

BEFORE THE CITY COMMISSION
CITY OF STUART, FLORIDA

RESOLUTION NUMBER 59-2017

A RESOLUTION OF THE CITY COMMISSION OF THE CITY OF STUART, FLORIDA AUTHORIZING THE MAYOR TO EXECUTE A LETTER SUPPORTING THE MARTIN COUNTY BOARD OF COUNTY COMMISSIONERS' APPLICATION FOR A PADDLING TRAIL DESIGNATION THROUGH THE FLORIDA DEPARTMENT OF ENVIRONMENTAL PROTECTION (FDEP) OFFICE OF GREENWAYS AND TRAILS; PROVIDING AN EFFECTIVE DATE; AND FOR OTHER PURPOSES.

* * * * *

NOW, THEREFORE, BE IT RESOLVED BY THE CITY COMMISSION OF THE CITY OF STUART, FLORIDA that:

SECTION 1: The CITY COMMISSION authorizes the Mayor to execute a letter supporting the Martin County Board of County Commissioners' application for a Paddling Trail Designation through the Florida Department of Environmental Protection (FDEP) Office of Greenways and Trails.

SECTION 2: Effective Date: This Resolution shall become effective immediately upon its passage and adoption.

Commissioner _____offered the foregoing resolution and moved its adoption. The motion was seconded by Commissioner _____and upon being put to a roll call vote, the vote was as follows:

	YES	NO	ABSENT
THOMAS CAMPENNI, MAYOR			
TROY MCDONALD, VICE MAYOR			
JEFFREY A. KRAUSKOPF, COMMISSIONER			
KELLI GLASS-LEIGHTON, COMMISSIONER			
EULA R. CLARKE, COMMISSIONER			

ADOPTED this 22th day of May, 2017.

ATTEST:

_____
CHERYL WHITE
CITY CLERK

_____
TOM CAMPENNI
MAYOR

APPROVED AS TO FORM AND
CORRECTNESS:

_____
MICHAEL MORTELL
CITY ATTORNEY

Christine Small Christine.Small@dep.state.fl.us

Division of Recreation and Parks

Florida Department of Environmental Protection

3900 Commonwealth Blvd., M.S. 795

Tallahassee, FL 32399-3000

Dear Mrs. Small,

I am pleased to provide this letter of support for the Martin County Board of County Commissioners (BOCC) application for a Paddling Trail Designation through the Florida Department of Environmental Protection (FDEP) Office of Greenways and Trails.

The City of Stuart sees the significant value and importance of the South Fork of the St. Lucie River which, in addition to its biological importance, provides connections to the Intracoastal Waterway, water access inland and a connection to Lake Okeechobee via the St. Lucie Canal (C-44). Additionally, the Indian River Lagoon is the most diverse estuary in North America. These ecosystems serve an integral role in Martin County with potential to benefit eco-tourism, public parks and preserves, wildlife and adjacent local businesses.

It was recommended in the 2014 Martin and St. Lucie Regional Waterways Plan to seek designation of local paddling trails as Blueways, partnering with FDEP and with national paddling groups and organizations to enhance tourism benefits. The designation of the South Fork and Indian River Lagoon also has support from various members of the public, including the "27-80 Paddlers Club", who have specifically requested this designation from county staff.

Officially recognized Blueways would be beneficial to Martin County and the associated water-based industries and community. On behalf of the City of Stuart, we strongly support the actions being taken for a Paddling Trail designation of the St. Lucie River South Fork and Indian River Lagoon within Martin County.

Sincerely,

Tom Campenni, Mayor

CITY OF STUART, FLORIDA
AGENDA ITEM REQUEST
CITY COMMISSION

Meeting Date:5/22/2017 **Prepared by:**S. Mayer

Title of Item:

ORDINANCE No. 2354-2017; AN ORDINANCE OF THE CITY OF STUART, FLORIDA AMENDING CHAPTER 2, SECTION 2.03.05, TABLE 3 "MAXIMUM DWELLING UNITS PER ACRE" OF THE CITY'S LAND DEVELOPMENT CODE, PROVIDING FOR CONSISTENCY WITHIN THE MINIMUM LOT SIZE REQUIREMENTS BY INCREASING THE MAXIMUM DENSITIES FOR THE R-1A AND R-1 DISTRICTS TO BE CONSISTENT WITH THE CITY'S COMPREHENSIVE PLAN; DECLARING SAID AMENDMENTS TO BE CONSISTENT WITH THE CITY'S COMPREHENSIVE PLAN; PROVIDING FOR A SEVERABILITY CLAUSE, A CONFLICT CLAUSE AND CODIFICATION; PROVIDING FOR AN EFFECTIVE DATE, AND FOR OTHER PURPOSES.

Summary Explanation/Background Information on Agenda Request:

Since the City's first comprehensive zoning code was established in 1967, the minimum lot sizes for one and two family homes have remained unchanged. For R-1A, the minimum lot size is 10,000 square feet and for R-1 the minimum lot size is 7,500 square feet.

Sometime after the adoption of density limitations in the Comprehensive Plan, in 2002, the LDC itself was inexplicably or perhaps inadvertently altered to include even more restrictive density limitation of four (4) units per acre in the R-1A zoning district, and five (5) units per acre in the R-1 zoning district. From real world, practical application, the City has been made aware of a discrepancy that is preventing a land owner from subdividing a lot into two lots that meet the minimum lot size. This instance was said into record by owner, Jeremy Lemaster, at the City's workshop hearing regarding density.

Me. Lemaster impressed upon the City that each month of delay has real cost implications. The City desires through this remedial ordinance to correct the discrepancy in the Land Development Code, by increasing the densities within Table 3 of the Land Development Code to 7 units per acre. This correction is both equivalent and consistent with the maximum limitation of the adopted Comprehensive Plan and is in compliance with the City's long standing minimum lot sizes.

Please be aware that the City is also proposing a broader correction to the Comprehensive Plan and will bring forward a companion Land Development Code text amendment that if adopted will supersede this proposed remedial ordinance. The goal of this ordinance is to allow the subdivision of a lot that currently meets the Land Development Code to occur at least one month sooner than the companion Ordinance that being heard along with the Comprehensive Plan text amendment. Furthermore, staff is currently working along with the Treasure Coast Regional Planning Council in the preparation of a complete and satisfactory data and analysis for the Comprehensive Plan, which will be scheduled for June 12.

Funding Source:

N/A

Recommended Action:

Staff recommends approval of remedial Ordinance 2354-2017, which corrects an internal discrepancy between the Land Development Code and is in compliance with the maximum densities allowed in the City's adopted Comprehensive Plan.

ATTACHMENTS:

	Description	Upload Date	Type
🗋	2354-2017	5/18/2017	Ordinance add to Y drive

Return to:

City Attorney's Office
City of Stuart
121 SW Flagler Street
Stuart, FL 34994

BEFORE THE CITY COMMISSION
CITY OF STUART, FLORIDA

ORDINANCE NO: 2354-2017

AN ORDINANCE OF THE CITY OF STUART, FLORIDA AMENDING CHAPTER 2, SECTION 2.03.05, TABLE 3 "MAXIMUM DWELLING UNITS PER ACRE" OF THE CITY'S LAND DEVELOPMENT CODE, PROVIDING FOR CONSISTENCY WITHIN THE MINIMUM LOT SIZE REQUIREMENTS BY INCREASING THE MAXIMUM DENSITIES FOR THE R-1A AND R-1 DISTRICTS TO BE CONSISTENT WITH THE CITY'S COMPREHENSIVE PLAN; DECLARING SAID AMENDMENTS TO BE CONSISTENT WITH THE CITY'S COMPREHENSIVE PLAN; PROVIDING FOR A SEVERABILITY CLAUSE, A CONFLICT CLAUSE AND CODIFICATION; PROVIDING FOR AN EFFECTIVE DATE, AND FOR OTHER PURPOSES.

****

WHEREAS, the effective regulation of zoning density, as a means of regulating the volume, location, and intensity of residential dwelling units is vital to the public's health safety and welfare; and

WHEREAS, Policy A7.2 of the City's Comprehensive Plan establishes a "Table of Land Use Densities and Intensities which provides that the maximum dwelling units per acre of 7 dwelling units per acre within the Low Density Residential Future Land Use Designation; and

WHEREAS, on February 16, 2017, the Local Planning Agency met for the purpose of

transmitting its recommended amendment to the Land Development Code; and

WHEREAS, the Stuart City Commission held duly noticed public workshop on May 3, 2017, and public hearings on May 22 and June 12, 2017, to consider this ordinance and provide for full public participation in the Land Development Code amendment process.

NOW THEREFORE, BE IT ORDAINED BY THE CITY COMMISION OF THE CITY OF STUART, FLORIDA that:

SECTION 1: The City of Stuart Land Development Code Chapter 2, Section 2.03.05, Table 3, "Maximum Dwelling Units per Acre" is hereby amended as follows:

TABLE 3

MAXIMUM DWELLING UNITS PER ACRE

Comprehensive Plan Land Use Classification	Zoning Districts																		
	R1-A	R-1	R-2	R-3	RPUD[1]	B-1	B-2	B-3	B-4	CPUD	P	I	IPUD	H	PSPUD	MXPUD	Urban Code District	East Stuart		
																		GRO	BMU	SFD
Low Density Residential	~~4~~ 7	~~5~~ 7	7		$4^2/7^3/15^4$															
Multi-family Residential				10	$4^2/7^3/15^4$	10	L	L								15^2				
Office/Residential				10	15	10	10	10		$5^7/7^8/10^4$						15^2				
Commercial				10		10	L	L		$5^7/7^8/10^4$						15^2				
Downtown Redevelopment				15/30	15/30[3]	15/30	15/30			$5^7/7^8/10^4$						15^2	15/30[6]			
Neighborhood/ Special Dist.					15					$5^7/7^8/10^4$						15^2	15/30[6]			
Industrial																				
East Stuart																15^2		15/30[5]	15/30[5]	17
Marine/Industrial				15			15									15^2	15/30[6]			
Public											E									
Recreation																				
Institutional					$4^2/7^3/15$															
Conservation																				

R-1A Single Family - Estate; R-1 Single Family - General; R-2 Duplex; R-3 Multi-Family/Office; R-M Residential Multi-Family; B-1 Business -Limited; B-2 Business-General; B-3 Business-Restricted; B-4 Limited Business/Manufacturing; P Public Service; I Industrial; H Hospital; Planned Unit Development (PUD) includes Residential (RPUD), Commercial (CPUD), Public Service (PSPUD), Industrial (IPUD), and Mixed Use (MXPUD); Urban Code District includes Urban General (UG), Urban Center (UC), Urban Neighborhood (UN), Urban Highway (UH), Urban Waterfront (UW); East Stuart District includes Business and Mixed Use (BMU), General Residential and Office (GRO), Single-family and Duplex (SFD).

Footnotes:

1 = Assisted Living Facility (ALF) is allowed a maximum of 30 units per acre in land use classification multi-family residential, office/residential, and downtown redevelopment.
2 = Single Family Detached Dwelling Unit
3 = Single Family Attached Dwelling Unit
4 = Multi-Family Dwelling Unit
5 = Potential Bonus Units Allowable. Where not less than 50% of the total residential units of site are smaller than 1,500 square feet in size, then at the sole discretion of the city commission, a residential unit variety density bonus may be awarded (Refer to Land Development Code Table 2.07.00.C).
6 = Up to 30 units with Major Urban Code Conditional Use
7 = Based on R-1 Density Requirements
8 = Based on R-2 Density Requirements
9 = Based on R-3, B-1 and B-2 Density Requirements
10 = Up to 30 with East Stuart District Conditional Use Approval
11 = Up to 30 upon approval by City Commission with a RPUD within the Downtown Redevelopment Land Use area

E = Only Residential dwelling unit allowed and only by Conditional Use
L = Limited. No maximum density established by Land Development Code or Comprehensive Plan at this time. Rather, the term "Limited" is used instead of a numerical value.

SECTION 2: All ordinances or parts of ordinances herewith are hereby repealed to the extent of such conflict.

SECTION 3: If any word, clause, sentence, paragraph, section or part thereof contained in this Ordinance is declared to be unconstitutional, unenforceable, void or inoperative by a court of competent jurisdiction, such declaration shall not affect the validity of the remainder of this Ordinance.

SECTION 4: The provisions of this ordinance shall be codified.

SECTION 5: This ordinance shall become effective immediately upon adoption.

PASSED on First Reading this _____ day of _____, 2017.

Commissioner _____ offered the foregoing ordinance and moved its adoption. The motion was seconded by Commissioner _____ and upon being put to a roll call vote, the

vote was as follows:

THOMAS CAMPENNI, MAYOR			
TROY A. MCDONALD, VICE MAYOR			
KELLI GLASS-LEIGHTON, COMMISSIONER			
JEFFREY A. KRAUSKOPF, COMMISSIONER			
EULA R. CLARK, COMMISSIONER			

ADOPTED on second and final reading this _____ day of _____, 2017.

ATTEST:

_____
CHERYL WHITE
CITY CLERK

_____
THOMAS CAMPENNI
MAYOR

APPROVED AS TO FORM
AND CORRECTNESS:

_____
MICHAEL J. MORTELL
CITY ATTORNEY

CITY OF STUART, FLORIDA
AGENDA ITEM REQUEST
CITY COMMISSION

Meeting Date: 5/22/2017 **Prepared by:** Stephen Mayer

Title of Item:

ORDINANCE No. 2344-2017; AN ORDINANCE OF THE CITY COMMISSION OF THE CITY OF STUART, FLORIDA TO PROVIDE FOR THE ABANDONMENT OF CERTAIN PUBLIC RIGHT-OF-WAY WITHIN THE CITY BEING THAT CERTAIN 40-FOOT RIGHT-OF-WAY, AS SET FORTH ON THE PLAT OF STUART FARMS, AS RECORDED IN PLAT BOOK 1, PAGE 63, MARTIN COUNTY, FLORIDA PUBLIC RECORDS RUNNING NORTH TO SOUTH THROUGH THE PROPERTY DESCRIBED IN EXHIBIT "A" ATTACHED HERETO AND DEPICTED IN EXHIBIT "B" ATTACHED HERETO; PROVIDING FOR SEVERABILITY; PROVIDING AN EFFECTIVE DATE; AND FOR OTHER PURPOSES. (RC)

Summary Explanation/Background Information on Agenda Request:

On January 9th, 2017, the City Commission voted to approve the Clarity Pointe PUD, which contained the condition that the applicant shall undertake all necessary means to abandon a 40 foot right-of-way bisecting the property in a north to south direction. During City Commission discussion, the intent to abandon the property was established and the Commission authorized the Mayor to execute all documentation necessary to accomplish this task. The Applicant has requested that the City transfer any interests in the said right-of-way and has provided an appraisal (attached) of the property. The appraisal value ($40,000) shall be remitted to the City prior to second hearing of the right-of-way abandonment, scheduled for February 27th. The value of the appraisal will be paid in exchange for a privilege fee.

CITY MANAGER'S NOTE: The applicant has been made aware that the privilege fee must be paid prior to the Commission's consideration of this item on second reading, but at the time of the preparation of the Agenda, the payment had NOT been made.

Funding Source:

N/A

Recommended Action:

Subject to receipt of the applicable payment, staff recommends approval of Ordinance 2344-2017 on Second Reading.

ATTACHMENTS:

	Description	Upload Date	Type
🗋	Ordinance No. 2344-2017	5/17/2017	Ordinance add to Y drive
🗋	Appraisal of Right-of-Way	2/8/2017	Exhibit
🗋	Exhibit A - Legal Description	2/6/2017	Exhibit
🗋	Exhibit B - Survey	2/6/2017	Exhibit

BEFORE THE CITY COMMISSION
CITY OF STUART, FLORIDA

ORDINANCE NUMBER 2344-2017

A ORDINANCE OF THE CITY COMMISSION OF THE CITY OF STUART, FLORIDA TO PROVIDE FOR THE ABANDONMENT OF CERTAIN 40-FOOT PUBLIC RIGHT-OF-WAY WITHIN THE CITY, AS SET FORTH ON THE PLAT OF STUART FARMS, AS RECORDED IN PLAT BOOK 1, PAGE 63, MARTIN COUNTY, FLORIDA PUBLIC RECORDS RUNNING NORTH TO SOUTH THROUGH THE PROPERTY DESCRIBED IN EXHIBIT "A" ATTACHED HERETO AND DEPICTED IN EXHIBIT "B" ATTACHED HERETO; PROVIDING FOR SEVERABILITY; PROVIDING AN EFFECTIVE DATE; AND FOR OTHER PURPOSES.

* * * * * * *

WHEREAS, Clarity Pointe Development Partners, LLC has filed a petition for abandonment relating to the public right-of-way described below that conforms to the requirements of Section 36 of the Code of Ordinances of the City of Stuart, Florida; and

WHEREAS, at the public hearing to consider the requested abandonment the City Commission has determined that it is the best public interest that the said right-of-way be abandoned as said right-of-way is needed for continuity of several existing parcels.

NOW THEREFORE, THE CITY COMMISSION OF THE CITY OF STUART, FLORIDA ordains, as follows:

SECTION 1: That any interest vested with the City of Stuart or for which the City of Stuart has authority to abandon or transfer on behalf of the public in that certain 40-foot right-of-way, as set forth on the Plat of STUART FARMS, as recorded in Plat Book 1, Page 63, Martin County, Florida Public Records running North to South through the Property described in **Exhibit "A"** attached hereto and depicted in **Exhibit "B"** attached hereto is hereby abandoned.

SECTION 2: A location map depicting the subject area is hereby attached as **Exhibit "C."**

SECTION 3: Conflicts. All ordinances or parts of ordinances in conflict herewith shall be repealed.

SECTION 4: Severability: If any word, clause, sentence, paragraph, section or part thereof contained in this Ordinance is declared to be unconstitutional, unenforceable, void or inoperative by a court of competent jurisdiction, such declaration shall not affect the validity of the remainder of this ordinance.

SECTION 5: Effective Date: This Ordinance shall become effective immediately upon adoption.

Passed on first reading this 13th day of February, 2017.

Commissioner _____ offered the foregoing ordinance and moved approval on the second reading. The motion was seconded by Commissioner _____ and upon being put to a roll call vote, the vote was as follows:

	YES	NO	ABSENT
THOMAS F. CAMPENNI, MAYOR			
TROY MCDONALD, VICE MAYOR			
KELLI GLASS LEIGHTON, COMMISSIONER			
JEFFREY A. KRAUSKOPF, COMMISSIONER			
EULA R.CLARK, COMMISSIONER			

Adopted on second reading this 22nd day of May, 2017.

ATTEST:

CHERYL WHITE
CITY CLERK

TOM CAMPENNI
MAYOR

APPROVED AS TO FORM
AND CORRECTNESS:

MICHAEL MORTELL
CITY ATTORNEY

ACCEPTANCE AND AGREEMENT

BY SIGNING THIS ACCEPTANCE AND AGREEMENT PERTAINING TO THE ABANDONMENT OF RIGHT OF WAY IN ORDINANCE 2344-2017, THE UNDERSIGNED HEREBY ACCEPTS AND AGREES TO ALL OF THE TERMS AND CONDITIONS CONTAINED HEREIN AND IN ALL EXHIBITS, ATTACHMENTS AND DEVELOPMENT DOCUMENTS, INTENDING TO BE BOUND THEREBY, AND THAT SUCH ACCEPTANCE AND AGREEMENT IS DONE FREELY, KNOWINGLY, AND WITHOUT ANY RESERVATION, AND FOR THE PURPOSES EXPRESSED WITHIN THE ABOVE ORDINANCE.

IN WITNESS WHEREOF THE UNDERSIGNED HAS EXECUTED THIS ACCEPTANCE AND AGREEMENT:

WITNESSES:

_____

Print Name: _____

_____

Print Name: _____

CP-Stuart Development, LLC

By: _____

Richard Olson, Managing Partner

WITNESSES:

_____

Print Name: _____

_____

Print Name: _____

_____

Treasure Coast Properties, LLC

By: _____

_____

PETITIONER'S ACKNOWLEDGMENT

The above Ordinance, Acceptance and Agreement was acknowledged before me this _____ day of _____, 2017, by Richard Olson, Managing Partner.

_____

Notary Public, State of Florida

My Commission Expires:

Notary Seal

Personally Known _____ OR Produced Identification _____

Type of Identification Produced _____

OWNER'S ACKNOWLEDGMENT

The above Ordinance, Acceptance and Agreement was acknowledged before me this _____ day of _____, 2016, by _____.

_____

Notary Public, State of Florida

My Commission Expires:

Notary Seal

Personally Known _____ OR Produced Identification _____

Type of Identification Produced _____

CITY'S ACKNOWLEDGMENT

The above Ordinance, Acceptance and Agreement was acknowledged before me this _____day of _____, 2017, by Eula R. Clarke, Mayor, and Cheryl White, City Clerk, respectively, of the City of Stuart, Florida, a Florida municipal corporation.

_____

Notary Public, State of Florida

My Commission Expires:

Notary Seal

Personally Known _____ OR Produced Identification _____

Type of Identification Produced _____

EXHIBIT "A"

The Property

EXHIBIT "B"

Depiction of the Property

EXHIBIT "C"

Location Map Depicting Subject Area

AN APPRAISAL OF

THE ROAD DEDICATION ABANDONMENT LOCATED ON THE CLARITY POINTE PROPERTY IN STUART, FLORIDA

FILE #16-75152

PREPARED FOR

MR. RICHARD OLSEN
CP-STUART DEVELOPMENT, LLC

AS OF

SEPTEMBER 13, 2016

BY

STEPHEN G. NEILL, MAI
CALLAWAY & PRICE, INC.

Callaway & Price, Inc.

Real Estate Appraisers And Consultants
www.callawayandprice.com
Licensed Real Estate Brokers

Since 1972

SOUTH FLORIDA
1410 Park Lane South
Suite 1
Jupiter, FL 33458
Phone (561) 686-0333
Fax (561) 686-3705

Michael R. Slade, MAI, SRA, CRE
Cert Gen RZ116
mrs@cpwpb.com

Stephen D. Shaw, MAI
Cert Gen RZ1192
sds@cpwpb.com

Robert A. Callaway, MRICS
Cert Gen RZ2461
rac@cpwpb.com

TREASURE COAST
1803 South 25th Street
Suite 1
Fort Pierce, FL 34947
Phone (772) 464-8607
Fax (772) 461-0809

Stuart
Phone (772) 287-3330
Fax (772) 461-0809

Stephen G. Neill, Jr., MAI
Cert Gen RZ2480
s.neill@callawayandprice.com

SPACE COAST
1120 Palmetto Avenue
Suite 1
Melbourne, FL 32901
Phone (321) 726-0970
Fax (321) 726-0384

Curtis L. Phillips, MAI
Cert Gen RZ2085
clp@cpmel.com

CENTRAL FLORIDA
2816 E. Robinson Street
Orlando, FL 32803
Phone (321) 726-0970
Fax (321) 726-0384

Curtis L. Phillips, MAI
Cert Gen RZ2085
clp@cpmel.com

Please respond to Treasure Coast Office
E-Mail: s.neill@callawayandprice.com

October 19, 2016

Mr. Richard Olsen
4300 Legendary Drive, Suite 234
Destin, FL 32541

Dear Mr. Olsen:

We have made an investigation and analysis of the road dedication abandonment parcel located on the Clarity Pointe Property, which is specifically located on the south side of Indian Street, west of Kanner Highway, Stuart, Florida. The Subject Property will be further described both narratively and legally within the following Appraisal Report. The purpose of this investigation and analysis was to provide our opinion of the current Market Value of the Fee Simple Interest of the Subject Property as of September 13, 2016.

The Subject Property is considered to be the 40-foot road right of way that runs through the Clarity Pointe Parcel. Given the property type associated with the Subject Property, we have incorporated the across the fence methodology for valuing the Subject Property.

This report has been prepared for our client, Mr. Richard Olsen. The intended use was to assist the client in evaluation for abandonment and possible purchase. The scope of work performed is specific to the needs of the intended user and the intended use. No other use is intended, and the scope of work may not be appropriate for other uses.

The scope of work performed included a complete analysis of the Subject Property with no omitted approaches to value. A detailed scope of work description can be found in the body of this report.

Based upon the scope of the assignment, our investigation and analysis of the information contained within this report, as well as our general knowledge of real estate valuation procedures and market conditions, it is our opinion that the Market Value of the Fee Simple of the Subject Property as of September 13, 2016 was:

$40,000

A description of the property appraised, together with an explanation of the valuation procedures utilized, is contained in the body of the attached report. For your convenience, an Executive Summary follows this letter. Your attention is directed to the Limiting Conditions and underlying assumptions upon which the value conclusions are contingent.

Respectfully submitted,

CALLAWAY & PRICE, INC.

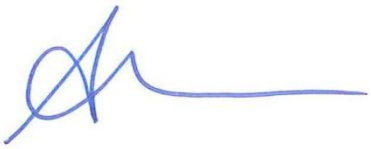

Stephen G. Neill, MAI
Cert Gen RZ2480

SGN/clw:16-75152
Attachments

PROPERTY TYPE	:	Road Dedication Abandonment/Vacant Commercial Land
LOCATION	:	The Subject Property is located on the south side of Indian Street, just west of Kanner Highway.
DATE OF VALUATION	:	September 13, 2016
PROPERTY DESCRIPTION:		
LAND	:	The total parcel associated with the Clarity Pointe Property contains a total of 11.27 acres. The road abandonment contains approximately 24,539 square feet (40 feet by 613) or 0.563 acres.
BUILDING	:	None
ZONING	:	RPUD, Residential PUD by City of Stuart
LAND USE PLAN	:	OP, Office Park
HIGHEST AND BEST USE		
AS IF VACANT	:	Commercial Development
THE MARKET VALUE OF THE FEE SIMPLE ESTATE OF THE SUBJECT PROPERTY ROAD DEDICATION ABANDONMENT AS OF SEPTEMBER 13, 2016	:	$40,000

Page No.
CERTIFICATION 1
LIMITING CONDITIONS 3
DEFINITION OF THE APPRAISAL PROBLEM 8
Purpose, Date of Value, and Interest Appraised 8
Intended Use and User of Appraisal 8
Legal Description 8
Market Value 8
Hypothetical Conditions or Extraordinary Assumptions 9
Marketing Time 9
Exposure Time 9
Across the Fence Method 10
Across the Fence Value 10
SCOPE OF WORK 11
NEIGHBORHOOD ANALYSIS 12
PROPERTY DATA 14
Zoning 14
Land Use 14
Concurrency 14
Site Size, Shape and Access 15
Utilities 16
Topography 16
Flood Hazard Zone 17
Assessed Value and Taxes 18
Property History 18
HIGHEST AND BEST USE 19
Conclusion 19
LAND VALUE ANALYSIS 20
Discussion of Vacant Land Sales 20
Discussion of Adjustments 30
Expenditures Made 31
Conclusion – Land Value Analysis 32
ADDENDA
Engagement Letter
Qualifications:
Stephen G. Neill, MAI

CERTIFICATION

We certify that, to the best of our knowledge and belief:

1. The statements of fact contained in this report are true and correct.

2. The reported analyses, opinions, and conclusions are limited only by the reported assumptions and limiting conditions, and are our personal, impartial, and unbiased professional analyses, opinions, and conclusions.

3. We have no present or prospective interest in the property that is the subject of this report, and we have no personal interest or bias with respect to the parties involved.

4. We have not performed services, as an appraiser or in any other capacity, regarding the subject of this report within the three-year period immediately preceding acceptance of this assignment.

5. We have no bias with respect to the property that is the subject of this report or to the parties involved with this assignment.

6. Our engagement in this assignment was not contingent upon developing or reporting predetermined results.

7. Our compensation for completing this assignment is not contingent upon the development or reporting of a predetermined value or direction in value that favors the cause of the client, the amount of the value opinion, the attainment of a stipulated result, or the occurrence of a subsequent event directly related to the intended use of this appraisal.

8. The analyses, opinions, and conclusion were developed, and this report was prepared, in conformity with the Uniform Standards of Professional Appraisal Practice (USPAP) and The Interagency Appraisal and Evaluation Guidelines, December 10, 2010.

9. Stephen G. Neill, MAI has made a personal inspection of the property that is the subject of this report.

10. No one provided significant real property appraisal assistance to the person(s) signing this certification.

11. The use of this report is subject to the requirements of the State of Florida relating to review by the Florida Real Estate Appraisal Board.

12. The reported analyses, opinions and conclusion were developed, and this report was prepared, in conformity with the Code of Professional Ethics and Standards of Professional Appraisal Practice of the Appraisal Institute.

13. The use of this report is subject to the requirements of the Appraisal Institute relating to review by its duly authorized representatives.

14. As of the date of this report, Stephen G. Neill, MAI has completed the continuing education program of the Appraisal Institute.

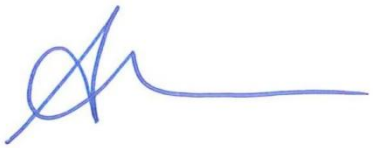

Stephen G. Neill, MAI
Cert Gen RZ2480

SGN/clw:16-75152

LIMITING CONDITIONS

1. Unless otherwise stated, the value appearing in this appraisal represents the opinion of the Market Value or the Value Defined AS OF THE DATE SPECIFIED. Market Value of real estate is affected by national and local economic conditions and consequently will vary with future changes in such conditions.

2. The value estimated in this appraisal report is gross, without consideration given to any encumbrance, restriction or question of title, unless specifically defined.

3. This appraisal report covers only the property described and any values or rates utilized are not to be construed as applicable to any other property, however similar the properties might be.

4. It is assumed that the title to the premises is good; that the legal description is correct; that the improvements are entirely and correctly located on the property described and that there are no encroachments on this property, but no investigation or survey has been made.

5. This appraisal expresses our opinion, and employment to make this appraisal was in no way contingent upon the reporting of predetermined value or conclusion.

6. No responsibility is assumed for matters legal in nature, nor is any opinion of title rendered. In the performance of our investigation and analysis leading to the conclusions reached herein, the statements of others were relied on. No liability is assumed for the correctness of these statements.

7. Neither all nor any part of the contents of this report (especially any conclusions, the identity of the appraiser or the firm with which he is connected, or any reference to the Appraisal Institute or any of its designations) shall be disseminated to the public through advertising media, public relations media, news media, sales media or any other public means of communication without our prior written consent and approval.

8. It is assumed that there are no hidden or unapparent conditions of the property, subsoil, or structures which would render it more or less valuable. The appraiser assumes no responsibility for such conditions or the engineering which might be required to discover these factors.

9. Unless otherwise stated in this report, the existence of hazardous substances, including without limitation stachybotrys chartarum (mold), asbestos, polychlorinated biphenyls, petroleum leakage, "Chinese drywall", or agricultural chemicals, which may or may not be present on the property, or other environmental conditions, was not called to the attention of, nor did the appraiser become aware of such during the appraiser's inspection. The appraiser has no knowledge of the existence of such materials on or in the property unless otherwise stated. The appraiser, however, is not qualified to test for such substances or conditions. If the presence of such substances, such as asbestos, urea formaldehyde foam insulation, or other hazardous substances or environmental conditions, may affect the value of the property, the value estimated is predicated on the assumption that there is no such proximity thereto that would cause a loss in value. We are unaware of very wet conditions that may have existed for days or weeks which are required to grow mold. No responsibility is assumed for any such conditions, or for any expertise or engineering knowledge required to discover them.

10. The Americans with Disabilities Act ("ADA") became effective January 26, 1992. The appraisers have not made a specific compliance survey and analysis of this property to determine whether or not it is in conformity with the various detailed requirements of the ADA. It is possible that a compliance survey of the property, together with a detailed analysis of the requirements of the ADA, could reveal that the property is not in compliance with one or more of the requirements of the Act. If so, this fact could have a negative effect upon the value of the property. Since the appraisers have no direct evidence relating to this issue, possible noncompliance with the requirements of ADA in estimating the value of the property has not been considered.

11. Our opinion of value was based on the assumption of competent marketing and management regarding the Subject Property. If there is no competent marketing and management, then the value contained herein may not apply.

VIEW OF SUBJECT PROPERTY ALONG INDIAN STREET

VIEW OF SUBJECT PROPERTY ALONG INDIAN STREET

INTERIOR VIEW

INTERIOR VIEW

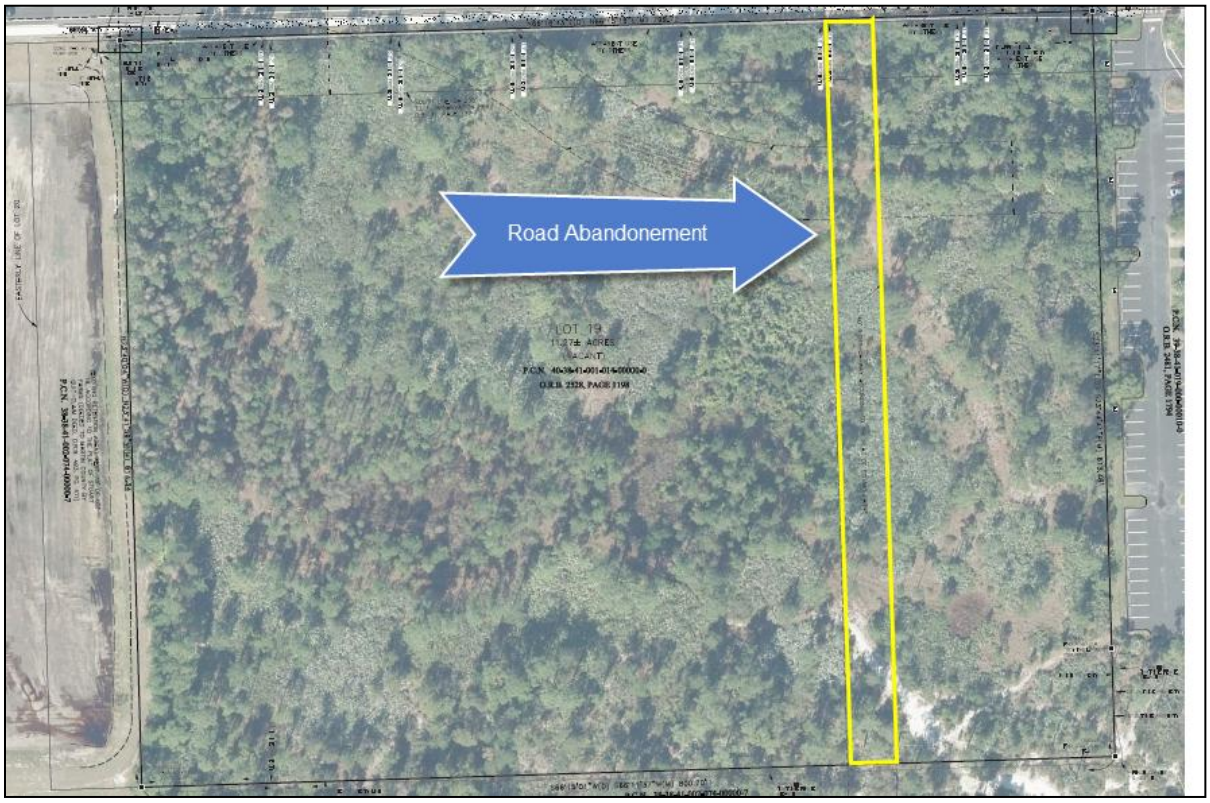

AERIAL PHOTO
(Right-of-Way Parcel in Yellow/Boundaries are Approximate)

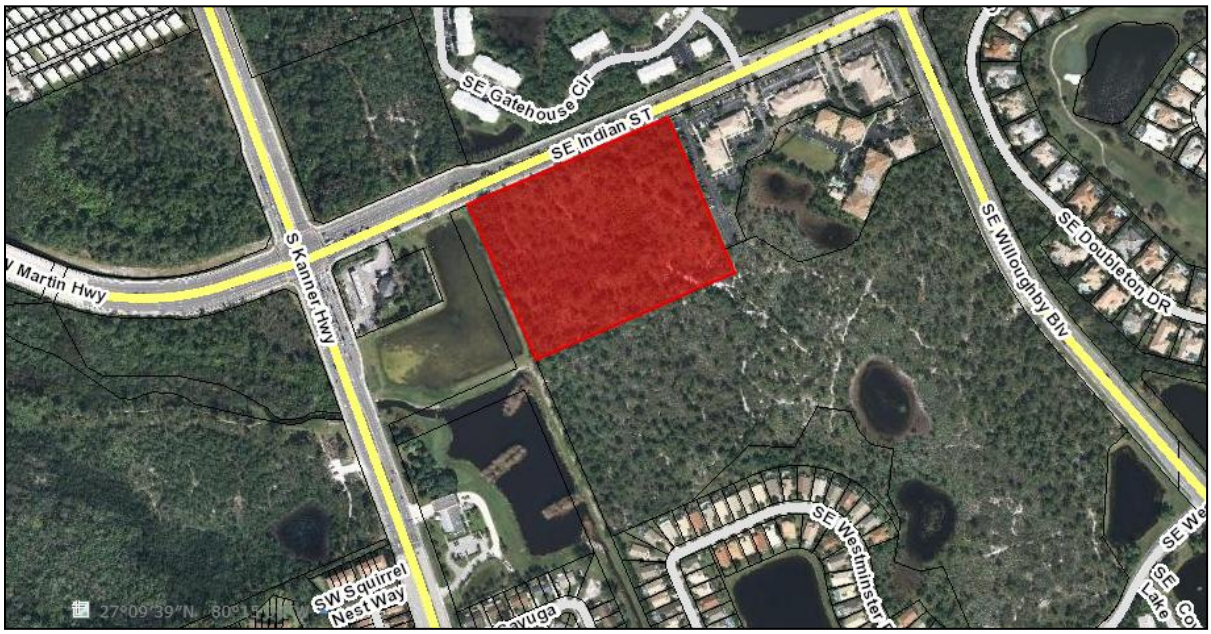

AERIAL PHOTO

DEFINITION OF THE APPRAISAL PROBLEM

Purpose, Date of Value, and Interest Appraised

The purpose of this investigation and analysis was to provide our opinion of the Market Value of the Fee Simple Interest of the Subject Property as of September 13, 2016.

Intended Use and User of Appraisal

This report has been prepared for our client, Mr. Richard Olsen. The intended use was to assist the client in evaluation for abandonment and possible purchase. The scope of work performed is specific to the needs of the intended user and the intended use. No other use is intended, and the scope of work may not be appropriate for other uses.

Legal Description

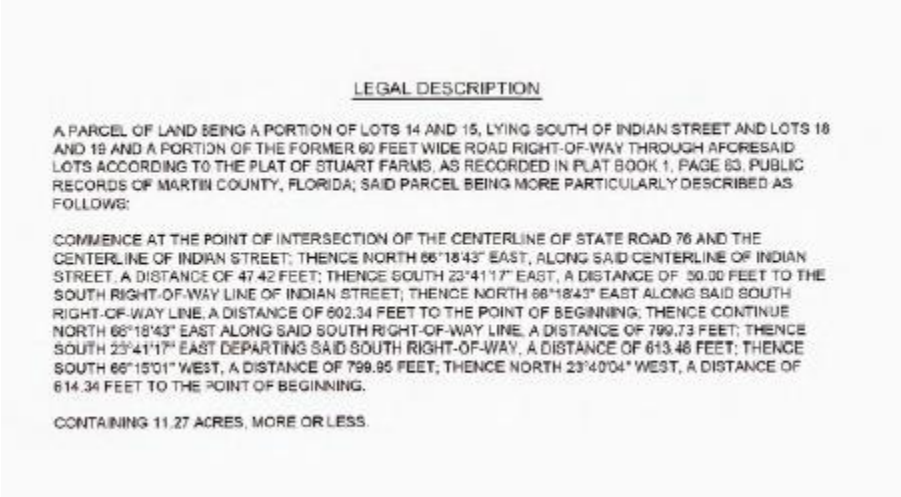

LEGAL DESCRIPTION

A PARCEL OF LAND BEING A PORTION OF LOTS 14 AND 15, LYING SOUTH OF INDIAN STREET AND LOTS 18 AND 19 AND A PORTION OF THE FORMER 60 FEET WIDE ROAD RIGHT-OF-WAY THROUGH AFORESAID LOTS ACCORDING TO THE PLAT OF STUART FARMS, AS RECORDED IN PLAT BOOK 1, PAGE 63, PUBLIC RECORDS OF MARTIN COUNTY, FLORIDA; SAID PARCEL BEING MORE PARTICULARLY DESCRIBED AS FOLLOWS:

COMMENCE AT THE POINT OF INTERSECTION OF THE CENTERLINE OF STATE ROAD 76 AND THE CENTERLINE OF INDIAN STREET; THENCE NORTH 66°18'43" EAST, ALONG SAID CENTERLINE OF INDIAN STREET, A DISTANCE OF 47.42 FEET; THENCE SOUTH 23°41'17" EAST, A DISTANCE OF 30.00 FEET TO THE SOUTH RIGHT-OF-WAY LINE OF INDIAN STREET; THENCE NORTH 66°18'43" EAST ALONG SAID SOUTH RIGHT-OF-WAY LINE, A DISTANCE OF 602.34 FEET TO THE POINT OF BEGINNING; THENCE CONTINUE NORTH 66°18'43" EAST ALONG SAID SOUTH RIGHT-OF-WAY LINE, A DISTANCE OF 799.73 FEET; THENCE SOUTH 23°41'17" EAST DEPARTING SAID SOUTH RIGHT-OF-WAY, A DISTANCE OF 613.46 FEET; THENCE SOUTH 66°15'01" WEST, A DISTANCE OF 799.95 FEET; THENCE NORTH 23°40'04" WEST, A DISTANCE OF 614.34 FEET TO THE POINT OF BEGINNING.

CONTAINING 11.27 ACRES, MORE OR LESS.

Client Provided

Market Value

"As defined in the Agencies' appraisal regulations, the most probable price which a property should bring in a competitive and open market under all conditions requisite to a fair sale, the buyer and seller each acting prudently and knowledgeably, and assuming the price is not affected by undue stimulus. Implicit in this definition are the consummation of a sale as of a specified date and the passing of title from seller to buyer under conditions whereby:

a. Buyer and seller are typically motivated;

b. Both parties are well informed or well advised, and acting in what they consider their own best interests;

c. A reasonable time is allowed for exposure in the open market;

d. Payment is made in terms of cash in U.S. dollars or in terms of financial arrangements comparable thereto; and

e. The price represents the normal consideration for the property sold unaffected by special or creative financing or sales concessions granted by anyone associated with the sale."

Source: The Interagency Appraisal and Evaluation Guidelines, Federal Register, Volume 75, No. 237, December 10, 2010, Pgs. 61-62.

Hypothetical Conditions or Extraordinary Assumptions

No Hypothetical Conditions or Extraordinary Assumptions were made for the valuation of the Subject Property.

Marketing Time

The Dictionary of Real Estate Appraisal, Sixth Edition 2015, by the Appraisal Institute, defines Marketing Time on page 140 as follows:

> "An opinion of the amount of time it might take to sell a real or personal property interest at the concluded market value level during the period immediately after the effective date of an appraisal. Marketing time differs from exposure time, which is always presumed to precede the effective date of an appraisal."

"Advisory Opinion 7 of the Appraisal Standards Board of The Appraisal Foundation and Statement on Appraisal Standards No. 6, "Reasonable Exposure Time in Real Property and Personal Property Market Value Opinions" address the determination of reasonable exposure and marketing time."

As in most markets, properties that are priced competitively and marketed professionally will sell before others which are not. Based on this, the Subject should have a marketing time of less than 12 months, provided adequate financing is available, the property is listed for sale at market value and is marketed by a competent brokerage firm.

Exposure Time

The Dictionary of Real Estate Appraisal, Sixth Edition 2015, by the Appraisal Institute, defines Exposure Time on page 83 as follows:

1. "The time a property remains on the market."

2. "The estimated length of time that the property interest being appraised would have been offered on the market prior to the hypothetical consummation of a sale at market value on the effective date of the appraisal. Exposure time is a retrospective opinion based on an analysis of past events assuming a competitive and open market."

There is a requirement under Standard Two to report exposure time according to the latest USPAP publication. "Exposure Time" is different for various types of property under different market conditions.

We have reviewed the exposure time on the sales contained in the Sales Comparison Approach in this appraisal. Based on that data and the current market, it is our opinion that the Subject Property would have had an exposure time of approximately 12 months or less.

Across the Fence Method

The Dictionary of Real Estate Appraisal, Sixth Edition 2015, by the Appraisal Institute, defines Across the Fence Method on page 3 as follows:

"A land valuation method often used in the appraisal of corridors. The across the fence method is used to develop a value opinion based on comparison to abutting land."

Across the Fence Value

The Dictionary of Real Estate Appraisal, Sixth Edition 2015, by the Appraisal Institute, defines Across the Fence Value on page 3 as follows:

"In the valuation of real estate corridors, the value concluded based on a comparison with adjacent lands before the consideration of any other adjustment factors."

SCOPE OF WORK

According to the 14th Edition of The Appraisal of Real Estate, page 38, "Scope of work encompasses all aspects of the valuation process, including which approaches to value will be used; how much data is to be gathered, from what sources, from which geographic area, and over what time period; the extent of the data verification process; and the extent of property inspection, if any.

The scope of work decision is appropriate when it allows the appraiser to arrive at credible assignment results and is consistent with the expectations of similar clients and the work that would be performed by the appraiser's peers in a similar situation."

The first step in the appraisal process involved defining the appraisal problem which included the purpose and date of value, determining the interest being appraised, intended use and user of the appraisal, and identifying the real estate (legal description). This step also determined if the appraisal were subject to any extraordinary assumptions or hypothetical conditions. In this case of the Subject Property, there were none.

The next step involved the inspection of the Subject Property on September 13, 2016 by Stephen G. Neill, MAI. The inspection allowed us to understand the physical components of the Subject Property. In addition to the inspection of the Subject Property, we also began the data collection process and, subsequently, an analysis of the factors that affect the market value of the Subject Property, including a market area analysis, neighborhood analysis, and property data analysis. We gathered and reviewed information from the Martin County Property Appraiser's Office and the City of Stuarts Planning Department. We also relied on information provided by the broker and surveyor.

The third step in the process was to determine the Highest and Best Use of the Subject Property as vacant and as improved. Through the Highest and Best Use analysis, we determined the issues that have an effect on the final opinion of value. To determine the Highest and Best Use, we relied on information obtained from the data collection process.

The fourth step was the application of the appropriate approaches to value. *No approaches were specifically omitted from this appraisal by the client.* However, for this assignment the Sales Comparison Approach was used to value raw land.

Since only one approach was used, no reconciliation of value was necessary.

NEIGHBORHOOD ANALYSIS

The relationship of the Subject Property with surrounding properties forms the basis of neighborhood analysis. The Appraisal of Real Estate, 14th Edition on page 165 states: "The boundaries of market areas, neighborhoods, and districts identify the areas that influence a subject property's value. These boundaries may coincide with observable changes in land use or demographic characteristics. Physical features such as structure types, street patterns, terrain, vegetation, and lot sizes help to identify land use districts. Transportation arteries (highways, major streets, and railroads), bodies of water (rivers, lakes, and streams), and changing elevation (hills, mountains, cliffs, and valleys) can also be significant boundaries."

Neighborhood Map

The neighborhood boundaries are defined to be as follows:

North:	SE Ocean Boulevard
South:	SE Pomeroy Street
East:	St. Lucie River
West:	S. Kanner Highway

The neighborhood is considered to be the central portion of the City of Stuart and portions of unincorporated Martin County.

The predominant transportation routes for the neighborhood are as follows:

Major North-South: Federal Highway, Dixie Highway, Kanner Highway
Major East-West: Monterey Road, Indian Street, SE Ocean Boulevard

Uses along U.S. Highway 1 include office, fast food restaurants, neighborhood and community shopping centers, gas station/convenience stores, and several auto dealerships. In addition, a Wal-Mart Supercenter is located on the east side of U.S. Highway 1.

Commercial development within the City of Stuart is a significantly higher percentage than that of an average city of comparable size. This is due primarily to the fact that Stuart is the county seat and commercial hub for Martin County, servicing a market area much larger than the population of Stuart. Additionally, the main Martin Memorial Hospital campus is within the city limits.

Industrial development within the City of Stuart is typical of an average city of comparable size. Industrial properties are situated primarily along a corridor adjacent to the FEC Railroad and Dixie Highway with scattered industrial uses along SE Federal Highway.

Indian Street Bridge

This project was completed in November 2013. It involves a newer bridge crossing of the South Fork of the St. Lucie River in Martin County, to connect Palm City with the City of Stuart. The bridge begins at the SR 714 (Martin Downs Boulevard)/ Florida's Turnpike intersection in Palm City and proceeds east to Willoughby Boulevard in Stuart. The corridor uses existing roadways as a footprint for the new alignment, by following CR 714 (Martin Highway) to the intersection with Mapp Road, then continuing along SW 36th Street to the River. On the east bank, the corridor picks up again at the Indian Street intersection with SR 76 (Kanner Highway) and proceeds east along Indian Street to Willoughby Boulevard. The ultimate crossing would serve as an alternate to SR 714 and the Palm City Bridge.

Conclusion

The City of Stuart will continue to be the hub of both governmental and commercial activity within Martin County. While growth within the city limits is hampered by a limited amount of current vacant land, there will continue to be revitalization and upgrading of existing properties. The continued growth in the unincorporated areas of Martin County will increase the demand for goods and services that are provided within the city limits of Stuart.

PROPERTY DATA

Location

The Subject Property is located along the south side of Indian Street, just west of Kanner Highway within the city limits of Stuart. A location map is located below for the reader's convenience.

Location Map

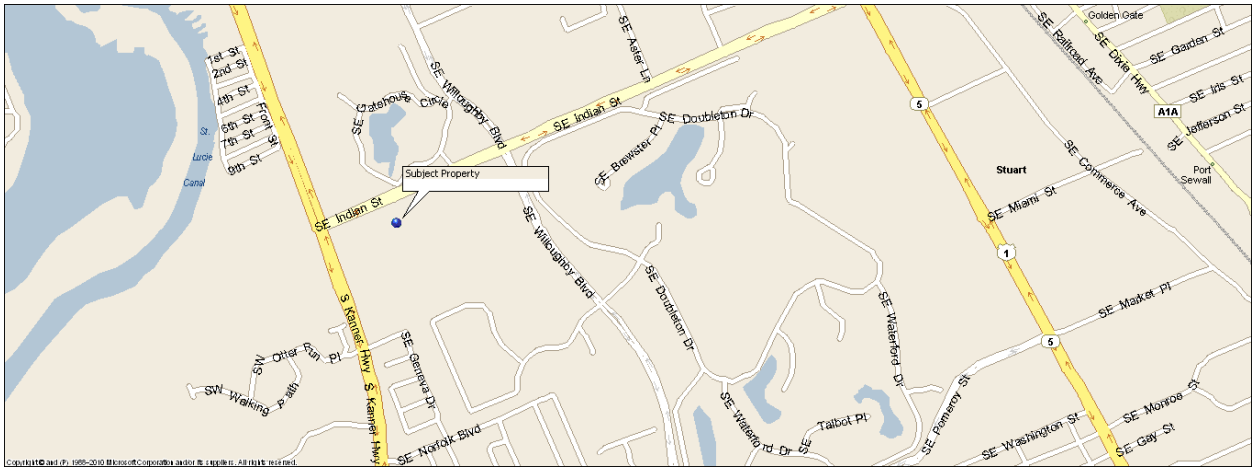

Zoning

The Subject Property has a zoning classification of R-PUD, Residential Planned Unit Development. According to the zoning department this PUD has expired and the zoning would fall to the current land use. According to the planner working on the project, they have submitted to update a portion of the site to R-PUD to allow for a memory care facility and C-PUD for a small retail outparcel.

Land Use

The Subject Property has a land-use classification of MF, Multi-Family Residential by the City of Stuart. This land-use classification allows for multi-family residential up to 15 units per acre with limited commercial.

Concurrency

In 1985, the Florida Legislature enacted the Local Government Comprehensive Planning and Land Development Regional Act (Chapter 163, Part II, Florida Statutes), commonly referred to as "The Growth Management Act".

In 2011, the state legislature rescinded this law, and now each county can address almost all of these factors as they wish. Sanitary sewer, solid waste, drainage, and

potable water are the only public facilities and services subject to the concurrency requirement on a statewide basis. If concurrency is applied to other public facilities, the local government comprehensive plan must provide the principles, guidelines, standards, and strategies, including adopted levels of service, to guide its application. In order for a local government to rescind any optional concurrency provisions, a comprehensive plan amendment is required. An amendment rescinding optional concurrency issues is not subject to state review. To the best of our knowledge, we are not aware of any concurrency issues with the Subject Property.

Site Size, Shape and Access

The road abandonment is part of a larger 11.27-acre parcel that will be known as Clarity Pointe. The site is rectangular and has good access from Indian Street. Located below is a proposed site plan.

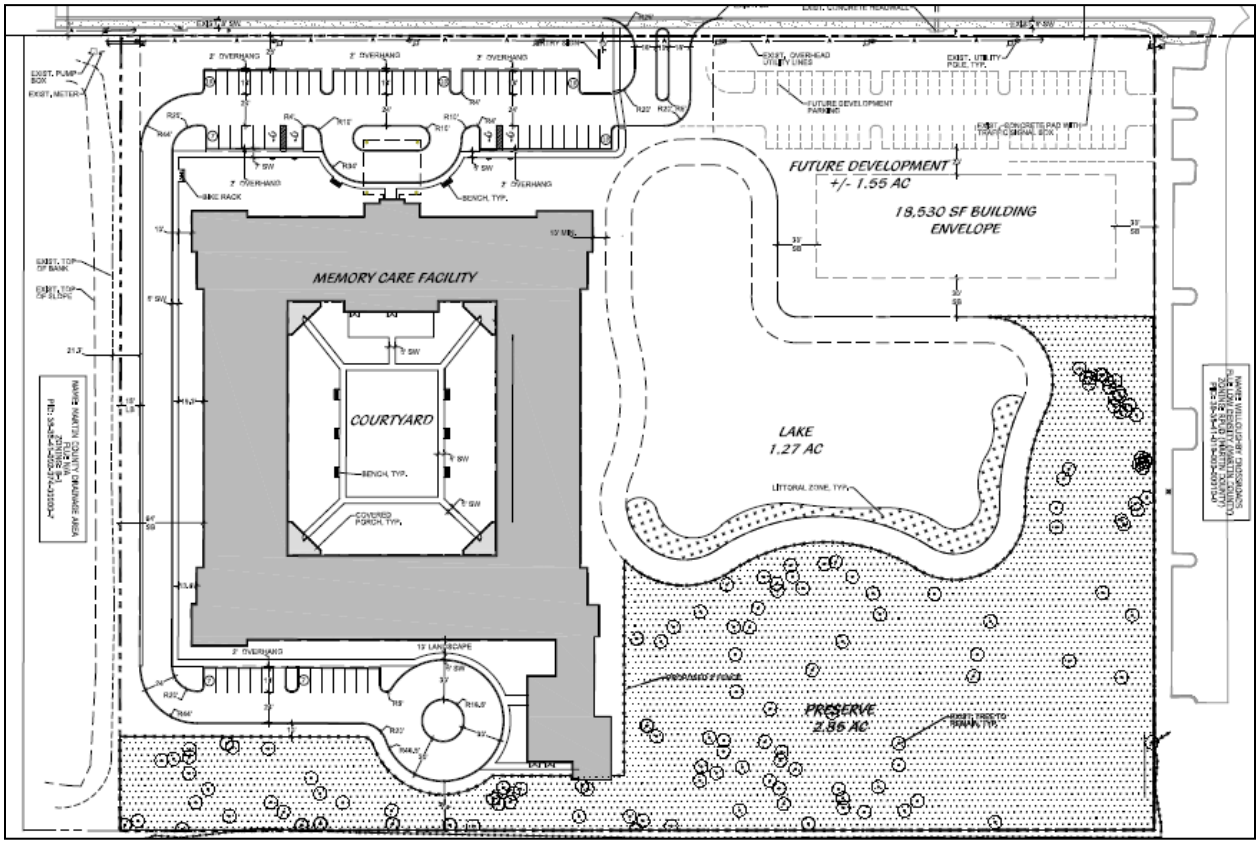

Utilities

Currently the public water, sewer and electricity are available to the Subject Property.

Topography

The Subject Property appears to be at road grade and according to the national wetlands mapper there are no wetlands.

Flood Hazard Zone

Flood Zone Code	Flood Zone Panel	Panel Date
X	120165 - 12085C0161G	03/16/2015
Special Flood Hazard Area (SFHA)	**Within 250 ft. of multiple flood zones?**	**Community Name**
Out	No	STUART

Flood Zone Description:

Zone X-An area that is determined to be outside the 100- and 500-year floodplains.

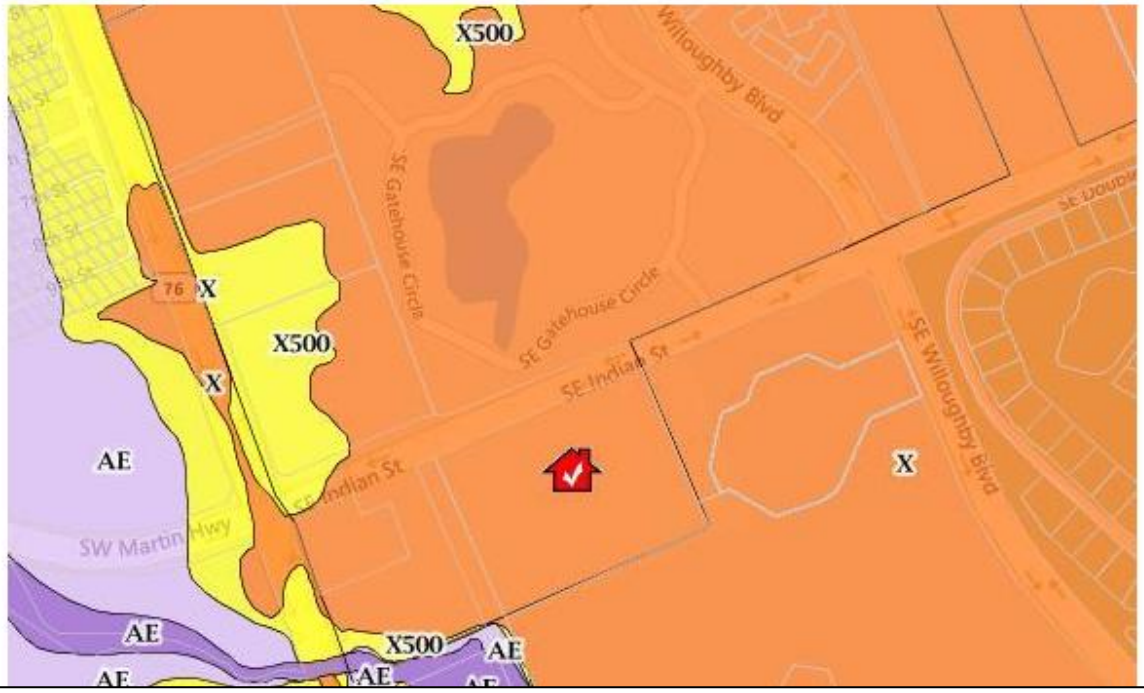

Assessed Value and Taxes

The total 2016 assessment value and the 2015 taxes for the Subject Property were as follows:

2016 Taxes							
Subject Property Parcel Control Number	Land Assessment	Building Assessment	Total Assessed Value	Total Just Value	Advalorem Taxes	Non-Advalorem Taxes	Total Taxes
40-38-41-001-014-00000.0000	$832,250	$0	$832,250	$832,250	$14,902	$108	$15,011
Totals	**$832,250**	**$0**	**$832,250**	**$832,250**	**$14,902**	**$108**	**$15,011**

* *It is noted that according to the contract price the assessed value may increase.*

Property History

The Subject Property is currently under the ownership of Treasure Coast Properties Investment. The current owner purchased the Subject Property in May 2011 for $1,100,000. This property was purchased from Capstone Resdev, LLC which was a holding company for PNC/National City Bank.

The property is currently under contract for $2,550,000. This includes approximately $400,000 in prepaid impact fees. The property is being purchased for development of a memory care facility. The property was listed for $2,750,000 prior to going under contract.

HIGHEST AND BEST USE

The Dictionary of Real Estate Appraisal, Sixth Edition 2015, by the Appraisal Institute defines Highest and Best Use on page 109 as follows:

1. "The reasonably probable use of property that results in the highest value. The four criteria that the highest and best use must meet are legal permissibility, physical possibility, financial feasibility, and maximum productivity."

2. "The use of an asset that maximizes its potential and that is possible, legally permissible, and financially feasible. The highest and best use may be for continuation of an asset's existing use or for some alternative use. This is determined by the use that a market participant would have in mind for the asset when formulating the price that it would be willing to bid. (IVS)"

3. "The highest and most profitable use for which the property is adaptable and needed or likely to be needed in the reasonably near future. (Uniform Appraisal Standards for Federal Land Acquisitions)."

Conclusion

It is our opinion that the Highest and Best Use of the Subject Property is for future mixed-use development in conjunction with neighboring parcels. The reasons for this conclusion are as follows:

1. The surrounding properties are generally zoned R-PUD, with an Multi-Family Future Land-Use Classification. The Subject is proposing to update the existing zoning to R-PUD and C-PUD. Both of these classifications allow for commercial development as well as residential development up to 15 units per acre.

2. The size, shape, and location of the Subject is ideal for a mixed-use development. The location has been upgraded by the recent opening of the Indian Street Bridge.

3. From all indications commercial and residential developments are financially feasible. Overall there appears to be demand for multi-family, medical office, and other similar type developments.

4. Given the Subject's current surrounding uses, it is our opinion that the maximally productive use of the Subject Property would be for future commercial/residential or mixed use development.

LAND VALUE ANALYSIS

According to the 14th Edition of The Appraisal of Real Estate on page 44, the valuation of land begins by identifying the real estate and property rights valued, any encumbrances, use restrictions, and the land's physical characteristics. An appraiser can use several techniques to obtain an indication of land value:

- Sales Comparison
- Extraction
- Allocation
- Subdivision Development
- Land Residual
- Ground Rent Capitalization

Usually the most reliable way to estimate land value is by sales comparison. When few sales are available, however, or when the value indications produced through sales comparison need additional support, procedures like extraction or allocation may be applied. In the case of the Subject Property the only approach used was the sales comparison approach.

Discussion of Vacant Land Sales

In order to estimate the value of the Subject site, a search was made for sales with development potential similar to the Subject and located along the waterfront. A search was made for commercial or mixed use land sales with similar location features and/or similar development potential.

We analyzed the Subject Property based on price per square foot basis, as this is the most recognized unit of comparison in this market. All of the comparables were considered with regard to property rights appraised, financing, conditions of sale, time or market conditions, location, size, quality, access and frontage, and zoning. The three comparable sales and current Subject Contract indicated a non-adjusted range from $2.83 to $5.42 per square foot.

Details of each sale along with a location map are located on the following pages. A sales chart and discussion follow.

Pending Land Sale 1

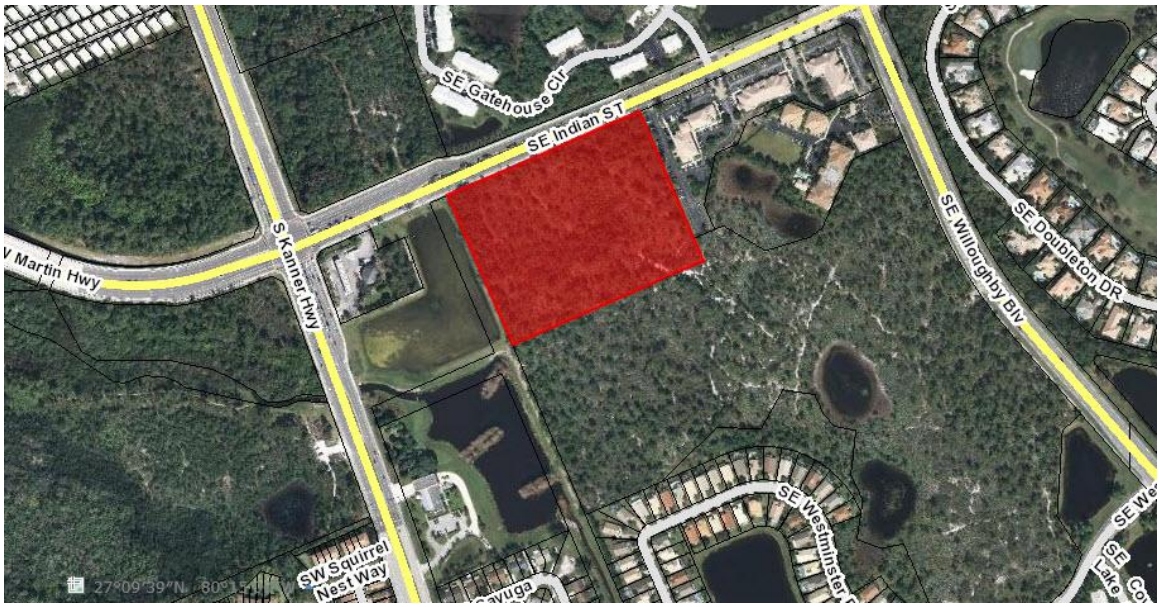

Property Identification

Record ID	3114
Property Type	Commercial, Office
Property Name	Clarity Pointe
Address	Stuart, Martin County, Florida
Location	South side of Indian Street, east of Kanner Highway
Tax ID	40-38-41-001-014-00000.000
Future Land Use	OP

Sale Data

Grantor	Treasure Coast Properties Investment
Grantee	Clarity Pointe Development Partners
Closing Date	October 01, 2016
Property Rights	Fee
Conditions of Sale	Arm's Length
Financing	Cash to Seller
Contract Price	$2,550,000
Cash Equivalent	$2,550,000
Downward Adjustment	$500,000
Adjusted Price	$2,050,000

Land Data

Zoning	RPUD, RPUD

Land Size Information

Gross Land Size	11.270 Acres or 490,921 SF

Indicators

Sale Price/Gross Acre	$226,264 Actual or $181,898 Adjusted
Sale Price/Gross SF	$5.19 Actual or $4.18 Adjusted

Remarks

The property is being purchased for the development of a memory care facility. The property included approximately $500,000 in prepaid impact fees.

Land Sale 2

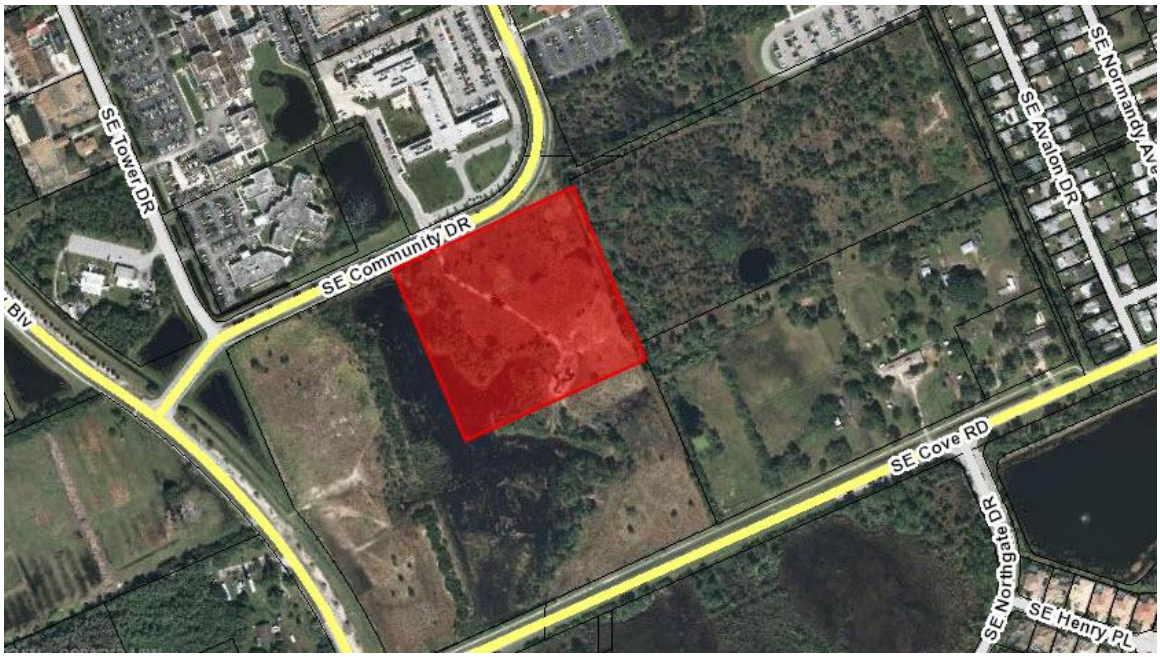

Property Identification

Record ID	3113
Property Type	Commercial, Office
Property Name	Treasure Coast Behavioral Health
Address	5995 SE Community Drive, Stuart, Martin County, FL
Tax ID	55-38-41-000-067-00030.10000
Future Land Use	COR

Sale Data

Grantor	Treasure Coast Properties
Grantee	Treasure Coast Behavioral Health
Sale Date	January 08, 2016
Deed Book/Page	2829/154
Property Rights	Fee
Conditions of Sale	Arm's Length
Sale Price	$2,100,000
Cash Equivalent	$2,100,000
Adjusted Price	$2,100,000

Land Data

Zoning	PUD, PUD
Topography	Most Uplands
Utilities	All Available

Land Size Information

Gross Land Size	9.400 Acres or 409,464 SF

Indicators

Sale Price/Gross Acre	$223,404 Actual or $223,404 Adjusted
Sale Price/Gross SF	$5.13 Actual or $5.13 Adjusted

Remarks

The property is located behind the Martin Memorial Hospital, south of Salerno Road. The property was purchased for development of a psychiatric hospital. The first phase will be a 52,000 square feet, 80-bed facility and the second phase will be 20,000 square feet and 40 beds.

According to the broker the property had been balanced and retention was in-place. The buyer got the approvals and the seller waited to close until they had them. There were no wetlands as an area of the property were disturbed and could be used as retention.

Land Sale 3

Property Identification

Record ID	2879
Property Type	Commercial, Commercial Land
Address	6500 SE Federal Highway, Stuart, Martin County, Florida
Location	West side of SE Federal Highway and just north of Seabranch Boulevard
Tax ID	31-38-42-008-000-0003.0, Multiple Parcels

Sale Data

Grantor	FCB Treasure Coast LLC
Grantee	Ribbon Ventures LLC
Sale Date	June 26, 2015
Deed Book/Page	2793/1889
Property Rights	Fee
Conditions of Sale	Arm's Length
Financing	Cash to Seller
Sale Price	$2,150,000
Cash Equivalent	$2,150,000
Adjusted Price	$2,150,000

Land Data

Zoning	PUD-C, Planned Development Commercial

Topography	Generally level, heavily wooded
Utilities	All available
Shape	Irregular

Land Size Information

Gross Land Size	17.450 Acres or 760,122 SF

Indicators

Sale Price/Gross Acre	$123,209
Sale Price/Gross SF	$2.83

Remarks

This is the sale of a 17.45-acre site that is part of the Mariner Village Square PUD. The property was marketed for over two years and was most recently listed at $2,275,000 prior to selling at $2,1500,000. The buyer has had a preliminary site plan drawn that involves a possible 41,000± square foot Wal-Mart grocery store, Negotiations have been in place for a ground lease with Wal-Mart for near $300,000 per year. Additionally, the buyer also plans on two out parcels, and approximately 3.80 acres for a residential care facility.

The site has an existing lake and small wetlands preserve that can be used in the sites retention plan.

Land Sale 4

Property Identification

Record ID	2902
Property Type	Commercial, Commercial Land
Address	7539 SW Lost River Road, Stuart, Martin County, Florida
Location	Just north of Kanner Highway and east of I-95
Tax ID	05-39-41-000-000-0013.0-4-0000

Sale Data

Grantor	95 Riverside LTD
Grantee	Ubinas LLC
Sale Date	May 22, 2015
Deed Book/Page	2785/1901
Property Rights	Fee
Conditions of Sale	Arms Length
Financing	Cash to Seller
Sale Price	$1,880,000
Cash Equivalent	$1,880,000
Adjusted Price	$1,880,000

Land Data

Zoning	C-PUD, Commercial Planned Unit Development
Topography	Generally level and at road grade
Utilities	All available

Land Size Information

Gross Land Size	11.710 Acres or 510,088 SF

Indicators

Sale Price/Gross Acre	$160,546 Actual or $160,546 Adjusted
Sale Price/Gross SF	$3.69 Actual or $3.69 Adjusted

Remarks

This is the sale of 11.72 acres of commercial zoned land as part of the 95 Riverside Commercial PUD located on the north side of Kanner Highway and east of I-95. The property was purchased as an investment and it was noted that full list price was paid.

Comparable Location Maps

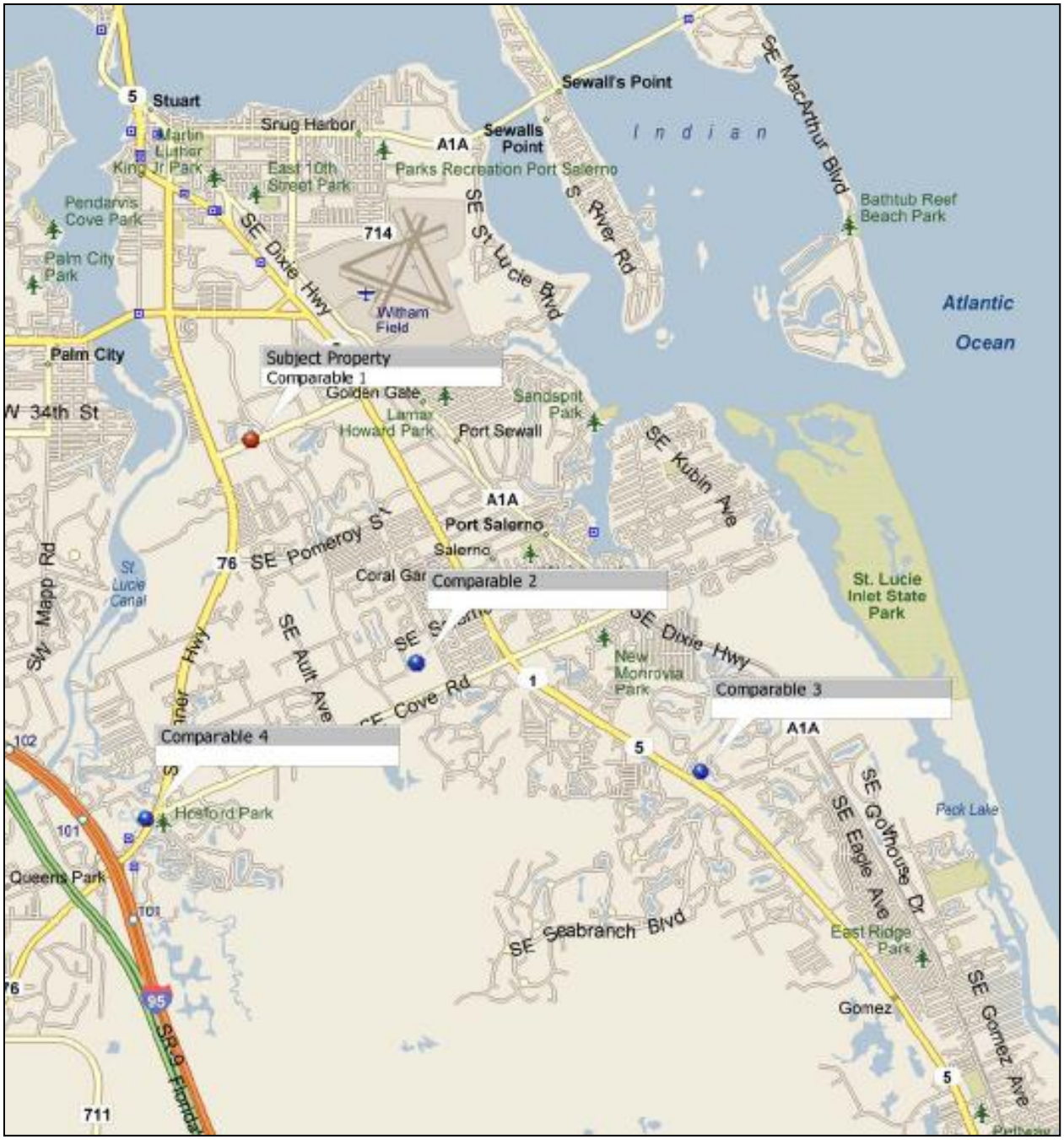

Discussion of Adjustments

We analyzed the Subject Property based on price per square foot basis, as this is the most recognized unit of comparison in this market. All of the comparables were considered with regard to property rights appraised, financing, conditions of sale, time or market conditions, location, size, quality, access and frontage, and zoning. The three comparable sales and current Subject Contract indicated a non-adjusted range from $2.83 to $5.42 per square foot.

Comparable Land Sales
Clarity Pointe
Callaway & Price, Inc. #16-75152

Sale Number	Subject	1	2	3	4
Record ID #	**-**	**3114**	**3113**	**2879**	**2902**
ORBK/PG	**-**	Contract	2829-0154	2793-1889	2785-1901
Sale Price	**-**	$2,050,000	$2,100,000	$2,150,000	$1,880,000
Size Acres	11.270	11.270	9.400	17.450	11.710
Size - SF	490,921	490,921	387,131	760,122	510,088
Price/Square Foot	-	$4.18	$5.42	$2.83	$3.69
Location	South side of Indian Street, east of Kanner Highway	South side of Indian Street, east of Kanner Highway	South of SE Community Drive, north of SE Cove Road	6500 SE Federal Highway, just north of Seabranch Boulevard	7539 SW Lost River Road, north side of Kanner Highway east of I-95
City	Stuart	Stuart	Stuart	Stuart	Stuart
Arm's Length	Yes	Yes	Yes	Yes	Yes
Property Rights	Fee	Fee	Fee	Fee	Fee
Date of Sale (Contract)		Current	Jan-16	Jun-15	May-15
Date of Value	Sep-16				
Zoning/Land Use	RPUD/OP	RPUD/OP	PUD/COR	PUD-C/CG	C-PUD/CG
Time Interval (Months)		Current	8	15	16
Conditions of Sale	0%	0%	0%	0%	0%
Market Condition Adj.	0%	0%	0%	10%	10%
Adjusted Price Per SF	**-**	**$4.18**	**$5.42**	**$3.11**	**$4.05**
Physical Adjustments					
Location	0%	0%	0%	0%	0%
Size	0%	0%	0%	10%	0%
Site Quailty	0%	0%	-10%	0%	0%
Access & Frontage	0%	0%	0%	0%	0%
Zoning	0%	0%	0%	0%	0%
Total Physical Adjustment	0%	0.00%	-10.00%	10.00%	0.00%
Adjusted Price Per SF	-	$4.18	$4.88	$3.42	$4.05

Average	$4.13
Minimum	$3.42
Maximum	$4.88
Median	$4.12

Property Rights Conveyed

All the sales in this analysis were transferred on a Fee Simple Estate basis, with the buyers receiving full property rights ownership. We are also unaware of any adverse deed restrictions or any other property rights limitations which would have affected the sales. Therefore, no adjustment was considered necessary for property rights conveyed.

Terms of Financing (Cash Equivalency)

The transaction price of one property may differ from that of a similar property due to atypical financing arrangements. In a case where favorable financing is established, a cash equivalency adjustment is often necessary. However, all of the sales analyzed herein involved either market terms or cash to Grantor. Therefore, no adjustments were made, nor any cash equivalency performed.

Additional Consideration

The contract of the Subject Property was adjusted down to consider the pre-paid items that are included in the contract. These include pre-paid impact fees and mitigation credits. These items were adjusted as we are valuing the fee simple interest of the land without consideration of these fees.

Conditions of Sale

Adjustments for conditions of sale usually reflect the motivations of the buyer and seller at the time of conveyance. Within the confirmation process, detailed attention was made to ensure the conditions of each sale. None were noted.

Expenditures Made

A knowledgeable buyer considers expenditures that will have to be made upon purchase of the property because these costs affect the price a buyer will pay. Our sales did not require any adjustments for expenditures made after the sale.

Time or Changes in Market Conditions

Market conditions generally change over time and may be caused by inflation, deflation, fluctuations in supply and demand, or other factors. The comparables occurred from May 2015 to a current pending contract. Comparables 4 and 5 are the oldest comparable and general market trends show that property values have slowly increased since this time period. Therefore, we have adjusted these comparables to note the increase in market conditions.

Location

All of the comparable properties have similar locations when compared to the Subject Property. Comparable 2 does not have the visibility of the Subject, however is located behind the hospital.

Size

The parent tract of the Subject Property contains 11.27 acres. The comparable sales indicate a range from 9.4 acres to 17.45 acres.

In our opinion, all of the sales are considered to be of similar size and no adjustments were necessary.

Site Quality

No adjustments were warranted.

Zoning

All of the comparables have similar commercial type zonings that allow for much of the same development uses. Therefore, we have not made any adjustments with regard to zoning.

Conclusion – Land Value Analysis

As can be seen on the comparable sales chart displayed earlier, the sales indicate an adjusted range from $3.42 to $4.88 per square foot, with an average indication of $4.13 per square foot and median indication of $4.13 per square foot. The best available data was analyzed and adjusted accordingly. After giving consideration to the adjusted values all of the comparable data and the current pending contract, it is our opinion the Market Value of the Subject site is best represented at $4.25 per square foot.

Road Dedication Abandonment Valuation

To determine the value of the road dedication abandonment we first must consider the original dedication. The road was originally dedicated in the 1920's as the Stuart Farms Plat. The roads were dedicated to the perpetual use of the public for streets and alleys. However, the property does revert back to the property owner whenever closed or discontinued by law. Given that the use is limited to streets and alleys only and reverts back to the property owners, this dedication is considered to be most similar to an easement and not fee simple title.

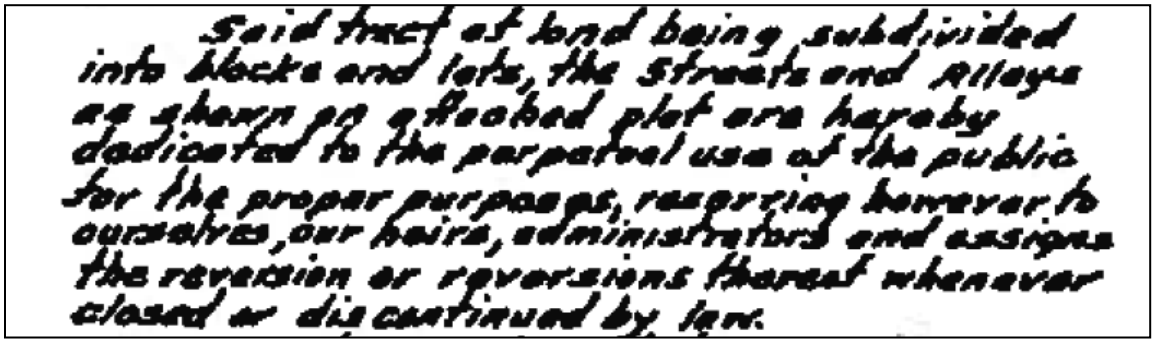
Said tract of land being subdivided into blocks and lots, the streets and alleys as shown on plotted plat are hereby dedicated to the perpetual use of the public for the proper purposes, reserving however to ourselves, our heirs, administrators and assigns the reversion or reversions thereof whenever closed or discontinued by law.

From all indications this dedication for this platted area has been abandoned both to the north and south of the Subject Property. To the south of the Subject Property is the Willoughby PUD that is encumbered by a conservation easement and to the north there is a multi-family project that has vacated this dedication. Therefore, the dedication is only on the 11.27-acre Subject Property and does not have any public good other than to serve the Subject Property. It is worth noting that the Martin County GIS system has the property closed on their system.

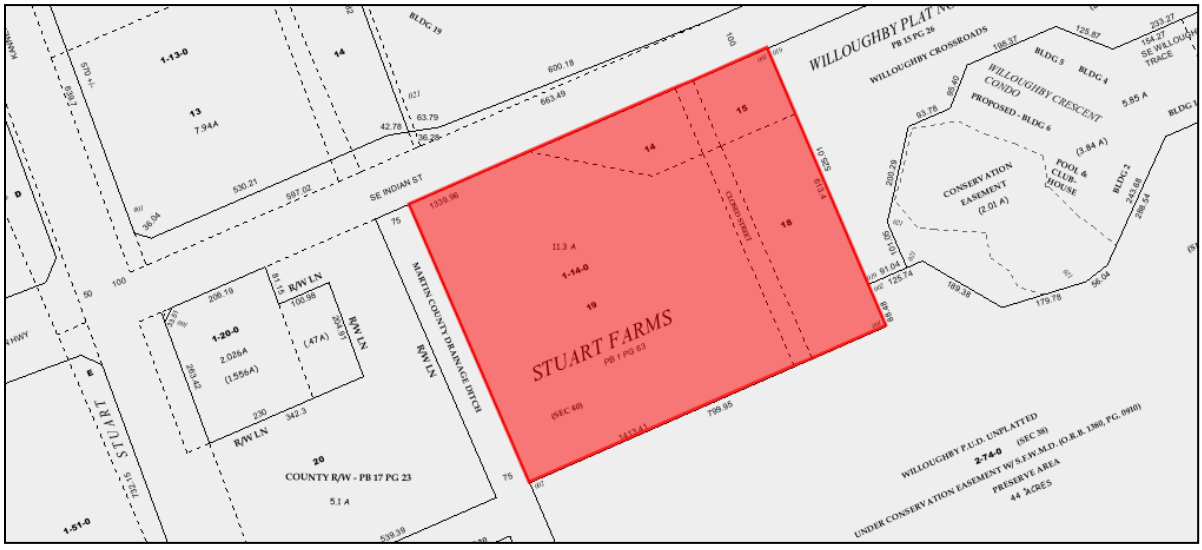

Given that the area is encumbered by this dedication and would have some effect on developability, we have considered that it would have some value to the dedication owner (the city). In our opinion this most resembles an easement.

Negative Effects on Easement

- Area is only can be used for streets and alleys per dedication
- Area reverts back to the property owner per dedication
- The dedication of the roadway to the north and south have already been abandoned. No access lost to the public.
- Roadway would not serve the public, only the surrounding fee simple owner and the roadway would be at the cost of the property owner, not the city.

Positive Effects on Easement

- Dedication could affect the development of the site
- Dedication affects the clear title of the property, nuisance factor

To support a diminution in value due to the Fee Simple Estate, we have provided an easement matrix published by Donald Sherwood, MAI summarizing different findings and data for easement types. Donald Sherwood, MAI is qualified in Federal and Texas State Courts as an expert on real estate values. He was appointed Special Commissioner for County District Court in 1980. Mr. Sherwood published an Easement Valuation Article in Right-of-Way Magazine dated May/June 2006.

EASEMENT VALUATION MATRIX

Percentage of Fee	Comments	Potential Types of Easements
90% - 100%	• Severe impact on surface use • Conveyance of future uses	• Overhead electric • Flowage easements • Railroad right-of-way • Irrigation canals • Access roads
75% - 80%	• Major impact on surface use • Conveyance of future uses	• Pipelines • Drainage easements • Flowage easements
51% - 74%	• Some impact on surface use • Conveyance of ingress/egress rights	• Pipelines • Scenic easements
50%	• Balance use by both owner and easement holder	• Water or sewer lines • Cable line • Telecommunications
20% - 49%	• Location along a property line, location across non-usable land area	• Water or sewer line • Cable lines
11% - 25%	• Subsurface or air rights that have minimal effect on use and utility • Location with a setback	• Air rights • Water or sewer line
0% - 10%	• Nominal effect on use and utility	• Small subsurface easement

In our opinion, the existing dedication has a "some limited impact" on the use of the site given that is there is no reason for the municipality to ever build this roadway as the dedication to the north and the south has already been closed. However, this dedication does need to be cleared for future development of the site. Therefore, the existing dedication would fall into the 25% to 50% category. This indicates that the land value associated with the proposed road abandonment of the Subject Property is $40,000. This is calculated as follows:

24,539 square feet (ROW Parcel) X $4.25 psf X 25% Diminution = $26,073

24,539 square feet (ROW Parcel) X $4.25 psf X 50% Diminution = $52,145

Rounded, $40,000

ADDENDA

Callaway & Price, Inc.

Real Estate Appraisers and Consultants
www.callawayandprice.com
Licensed Real Estate Brokers

Please respond to Treasure Coast office
E-Mail: s.neill@callawayandprice.com

SOUTH FLORIDA

1410 Park Lane South
Suite 1
Jupiter, FL 33458
Phone (561)686-0333
Fax (561) 686-3705

Michael R. Slade, MAI, SRA, CRE
Cert Gen RZ116
mrs@cpwpb.com

Stephen D. Shaw, MAI
Cert Gen RZ1192
sds@cpwpb.com

Robert A. Callaway, MRICS
Cert Gen RZ2461
rac@cpwpb.com

TREASURE COAST

1803 South 25th Street
Suite 1
Fort Pierce, FL 34947
Phone (772) 464-8607
Fax (772) 461-0809

Stuart
Phone (772) 287-3330
Fax (772) 461-0809

Stephen G. Neill, Jr., MAI
Cert Gen RZ2480
s.neill@callawayandprice.com

SPACE COAST

1120 Palmetto Avenue
Suite 1
Melbourne, FL 32901
Phone (321) 726-0970
Fax (321) 726-0384

Curtis L. Phillips, MAI
Cert Gen RZ2085
clp@cpmel.com

CENTRAL FLORIDA

2816 E. Robinson Street
Orlando, FL 32803
Phone (321) 726-0970
Fax (321) 726-0384

Curtis L. Phillips, MAI
Cert Gen RZ2085
clp@cpmel.com

August 29, 2016

Mr. Richard Olson
CP – Stuart Development, LLC
4300 Legendary Drive, Suite 234
Destin, FL 32541

VIA EMAIL: megan@olsonlandpartners.com

RE: Appraisal Fee Quote

Dear Mr. Olson:

We would be pleased to prepare an Appraisal of the Clarity Pointe property located on Indian Street in Stuart. It is our understanding that the purpose of this appraisal is to estimate the current Market Value of the Subject Property for road abandonment purposes.

This report will be prepared for CP – Stuart Development, LLC. The intended use is to assist the client for road abandonment purposes. The scope of work performed is specific to the needs of the intended user and the intended use. No other use is intended, and the scope of work may not be appropriate for other use.

The fee would be $2,500. It is our policy to require a retainer and $1,250 will suffice for this purpose. The balance of the fee will be due and payable upon delivery of the report. We will provide an electronic copy of the final report. Hard copies of the final report are available upon request.

We will have the report completed in approximately two to three weeks from the day we receive your authorization and information requested; **be aware that delays in our receipt of information requested could postpone completion.**

If the above is agreeable to you, please sign below as our authorization and return it together with the retainer and information requested and we will begin work immediately. This agreement is subject to the Agreements and Conditions listed on the attached page, a copy of which should also be signed and returned to us. Our work will be done in accordance with the Appraisal Institute Code of Ethics and Standards of Professional Practice. Thank you for the opportunity to be of service.

Respectfully submitted,

CALLAWAY & PRICE, INC.

Stephen G. Neill, MAI
Cert Gen RZ2480

SGN:clw
Attachments

Client:

Accepted By\Date: _____ 08-29-16
Signature Date

Name and Title (Printed or Typed): RICK OLSON, MANAGER

Client Fed ID# or SS#: 81-2603412

Conditions of Agreement

1. Premise: The completed report shall comply with the professional and ethical standards of the Appraisal Institute. The report will be addressed to the Client, or as directed by the Client.

2. Compensation: The fee is due and payable as designated in the contract letter; the retainer is to be sent to the Appraiser along with the signed contract letter, which constitutes authorization to commence the assignment. The Appraiser's/Consultant's compensation is in no event contingent upon a predetermined value or conclusion.

3. Completion Date: Every effort will be made to deliver the report as per the specified date in the contract letter. If delays occur for reasons beyond the control of the Appraiser/Consultant, such as not receiving necessary data requested from the Client in a timely manner, changes in the scope of services of the assignment, acts of God, et cetera, the due date shall be extended.

4. Changes: The Appraiser/Consultant shall, to the best of his ability, complete the assignment in compliance with professional and ethical standards of the appraisal industry. Changes that are not in keeping with these standards will necessitate a new contract letter and renegotiation of the original fee, or billed on a time basis plus the original fee.

5. Cancellation: The Client may cancel this agreement by written notice, or telephone followed by written notice. Appraiser/Consultant shall submit a statement based on professional time and expenses accrued, if applicable, for all services expended to the date of cancellation.

6. Additional Report Copies: Additional copies will be furnished upon request, and prepayment of $1.00 per page per report.

7. Collection: All fees and expenses are due upon delivery of the final report. A late charge of 1.5% per month shall be imposed on balances unpaid 30 days after the statement date. If collection efforts become necessary, all costs for same, including court costs and attorney's fees, will be added to the balance due. We are currently operating under an agreement with a collection agency, which charges us 53.8%. **If their collection services are required, Client's total balance due will be increased by 53.8%.**

8. Limiting Conditions: This agreement and the completed report shall be subject to the Limiting Conditions (included in said report).

9. Confidential Data: Data assembled for the assignment will remain the property of the Appraiser/Consultant. Data provided by the Client will be held in our file, unless otherwise instructed by the Client, and considered confidential. Appraiser/Consultant is authorized by the Client to disclose the report to appropriate representative of the Appraisal Institute to comply with the Bylaws and Regulations of this professional organization.

I hereby agree to the Conditions of Agreement outlined above.

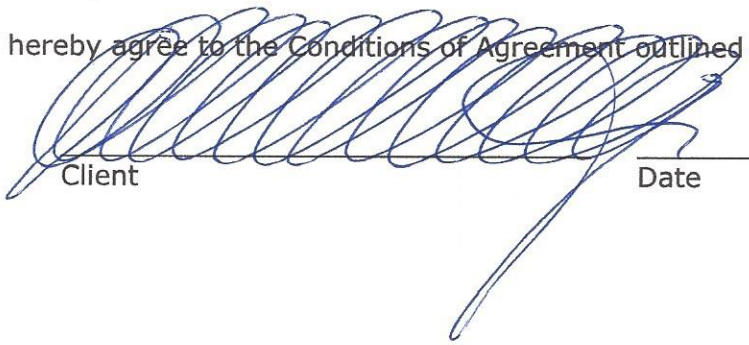

Client

08-29-16

Date

QUALIFICATIONS

Professional Designations\Licenses\Certifications

Member, Appraisal Institute, MAI Designation #12248
Florida State-Certified General Real Estate Appraiser #RZ2480
Florida Licensed Real Estate Broker #BK-0660406
Associate Member, American Society of Farm Managers and Rural Appraisers
International Right of Way Association Certified Right of Way Appraiser R/W-A/C

Professional Experience

Principal, Callaway & Price, Inc. – Since January 2006
Appraisal Consultant, Callaway & Price, Inc. – 7/02 – 12/05
Appraisal Consultant, Diskin Property Research - 4/00 – 6/02
Appraisal Consultant, Callaway & Price, Inc. – 5/97 – 4/00

Education

Bachelor of Science Degree in Business/Real Estate, Florida State University
Associates of Arts Degree, Indian River Community College

Appraisal Institute Courses:
- 410 Standards of Professional Practice, Part A
- 420 Standards of Professional Practice, Part B
- 510 Advanced Income Capitalization
- 520 Highest and Best Use and Market Analysis
- 530 Advanced Sales and Cost Approaches
- 540 Report Writing
- 550 Advance Applications
- Analyzing Operating Expenses
- Appraisal from Blueprints and Specifications
- FHA and the Appraisal Process
- Real Estate Finance Statistics & Valuation Modeling
- Analyzing Distressed Real Estate
- Expert Witness
- An Appraiser's Introduction & Overview of the U.S. Hotel Industry
- Hotel Market Studies & Valuating – Using Hotel Valuation Software
- Fundamentals of Separating Real Property, Personal Property, and Intangible Business Assets

International Right of Way Courses:
- 103 Ethics and the Right of Way Profession
- 400 Principles of Real Estate Appraisal
- 401 The Appraisal of Partial Acquisitions

USPAP – Biennial
Florida State Law for Real Estate Appraisers
Florida Law Update
Roles and Rules of Supervisors & Trainees
Appraisal Institute – Leadership Conference Participant

Qualified Expert Witness

Miami-Dade
Broward County
Indian River
Martin County
St. Lucie County
Bay County
US Bankruptcy Court, Middle District of Florida
Indian River County Special Magistrate – 2010, 2011, 2012 & 2013
St. Lucie County Special Magistrate – 2007, 2008, 2009, 2010, 2011, 2012 & 2013
Martin County – 2012 & 2013

Appraising\Consulting Expertise

ACLFs
Agricultural
Aircraft Hangers
Apartment Complexes
Branch Banks
Car Dealership
Citrus Groves
Condominium Projects
Eminent Domain
Golf Courses
Luxury RV Parks
Marinas
Mining Operations
Mini-Warehouses
Mobile Home Parks
Multifamily Residential
Office Buildings
Ranchland
Restaurants
Retail Buildings
Salvage Yards
Single-Family Residential
Sports Complexes
Subdivisions
Truckstops/Gas Stations
Warehouses
Vacant Land
Special Purpose Properties

Organizations and Affiliations

Rotary Member – Past President/Board of Directors
John Carroll High School Advisory Board
Treasure Coast Seminole Booster Club

STATE OF FLORIDA
DEPARTMENT OF BUSINESS AND PROFESSIONAL REGULATION

FLORIDA REAL ESTATE APPRAISAL BD
1940 N. MONROE ST.
TALLAHASSEE FL 32399-0783

850-487-1395

NEILL, STEPHEN G
1803 S25TH STREET SUITE 1
FORT PIERCE FL 34947

Congratulations! With this license you become one of the nearly one million Floridians licensed by the Department of Business and Professional Regulation. Our professionals and businesses range from architects to yacht brokers, from boxers to barbeque restaurants, and they keep Florida's economy strong.

Every day we work to improve the way we do business in order to serve you better. For information about our services, please log onto **www.myfloridalicense.com**. There you can find more information about our divisions and the regulations that impact you, subscribe to department newsletters and learn more about the Department's initiatives.

Our mission at the Department is: License Efficiently, Regulate Fairly. We constantly strive to serve you better so that you can serve your customers. Thank you for doing business in Florida, and congratulations on your new license!

STATE OF FLORIDA
DEPARTMENT OF BUSINESS AND PROFESSIONAL REGULATION

RZ2480 ISSUED: 10/27/2014

CERTIFIED GENERAL APPRAISER
NEILL, STEPHEN G

IS CERTIFIED under the provisions of Ch.475 FS.
Expiration date : NOV 30, 2016 L1410270002620

DETACH HERE

RICK SCOTT, GOVERNOR KEN LAWSON, SECRETARY

STATE OF FLORIDA
DEPARTMENT OF BUSINESS AND PROFESSIONAL REGULATION
FLORIDA REAL ESTATE APPRAISAL BD

LICENSE NUMBER
RZ2480

The CERTIFIED GENERAL APPRAISER
Named below IS CERTIFIED
Under the provisions of Chapter 475 FS.
Expiration date: NOV 30, 2016

NEILL, STEPHEN G
500 SOUTH US HIGHWAY 1 SUITE 107
FORT PIERCE FL 34950

ISSUED: 10/27/2014 DISPLAY AS REQUIRED BY LAW SEQ # L1410270002620

EXHIBIT "A"

THE LAND REFERRED TO HEREIN BELOW IS SITUATED IN THE COUNTY OF MARTIN, STATE OF FLORIDA, AND IS DESCRIBED AS FOLLOWS:

A parcel of land being a portion of Lots 14 and 15, lying South of Indian Street and Lots 18 and 19 and a portion of the former 50 foot wide Right of Way through aforesaid Lots, according to the Plat of Stuart Farms, as recorded in Plat Book 1, Page 63, Public Records of Martin County, Florida; said parcel being more particularly described as follows:

Commence at the Point of Intersection of the centerline of State Road 76 and the centerline of Indian Street; thence North 66 degrees 44' 27" East, along said centerline of Indian Street, a distance of 47.42 feet; thence South 23 degrees 15' 53" East, a distance of 50.00 feet to the South Right of Way line of Indian Street; thence North 66 degrees 44' 27" East along said South Right of Way line, a distance of 602.34 feet to the Point of Beginning; thence continue North 66 degrees 44' 27" East along said South right of way line, a distance of 799.73 feet; thence South 23 degrees 15' 33" East departing said South right of way, a distance of 613.48 feet; thence South 66 degrees 40' 45" West, a distance of 800.20 feet; thence North 23 degrees 15' 33" West, a distance of 614.34 feet to the Point of Beginning.

Together with all existing or subsequently erected or affixed buildings, improvements and fixtures; all easements, rights of way, appurtenances; all water, water rights, water/courses and ditch rights (including stocks and utilities with ditch or irrigation rights); and all other rights, royalties and profits relating to the real property including without limitation all mineral, oil, gas, geothermal, similar matters and all rights relating to the real property in and to all impact fees, utility reservation fees and similar fees paid to governmental agencies in connection with the development of the property.

Point of Commencement
FND. NAIL & WASHER (UNNUMBERED) 0.3' BELOW ASPHALT (JULY 1994) NOW DESTROYED

N66°18'43"E(D) N66°15'19"E(M) 47.42'

S23°41'17"E(D) S23°44'41"E(M) 50.00'

150'

50'

60' RIGHT-OF-WAY ACCORDING TO THE PLAT OF STUART FARMS

NORTHERLY LINE OF LOT 20 ACCORDING TO THE PLAT OF STUART FARMS
N66°18'43"E(D) N66°15'20"E(M) 602.34'

SOUTH R/W LINE OF INDIAN STREET

STATE ROAD 76

50' 50' 100'

EASTERLY R/W LINE OF S.R. 76 (AS SHOWN ON THE F.D.O.T. R/W MAP FOR S.R. 76, SECTION 89060-2510(2511) PAGES 13 & 14, LATEST REVISION 6-25-91)

EASTERLY LINE OF LOT 20

(EXISTING RETENTION AREA) WEST 75' OF LOT 19, ACCORDING TO THE PLAT OF STUART FARMS (DEEDED TO MARTIN COUNTY BY QUIT-CLAIM DEED O.R.B. 1483, PG. 411)
P.C.N. 38-38-41-002-074-00000-7

NORTH LINE OF 200' T.I.I.F. RESERVATION PER D.B. 31, PAGE 137

CENTERLINE 100' R/W, O.R.B. 141, PAGE 350

S.E. INDIAN STREET

CONC. SIDEWALK

CATCH BASIN

CONC. HEADWALL 3.4' OUTSIDE PROPERTY

4' OUTSIDE PROPERTY

6' CONC. SIDEWALK

TRAFFIC SIGNAL HAND HOLE ON PROPERTY LINE

DETAIL "B" BELOW LEFT

FIBER OPTIC VAULT "F.O."

6' CONC. SIDEWALK

DETAIL "A"

N66°18'43"E(D) N66°15'19"E(M) 799.72

CONC. PAD W/ PUMP BOX

ELECTRIC SERVICE W/ METERS 13' OUTSIDE PROPERTY

2" METAL PIPE

3" METAL PIPE

(70000) FND 4"x4" C.M. "PRM LB 6705 CREECH ENG INC." W. 0.14', N. 0.06'

APPARENT USE BY OTHERS

4.0' INSIDE PROPERTY

5.7' INSIDE PROPERTY

7.2' INSIDE PROPERTY

5.0' INSIDE PROPERTY

3.7' INSIDE PROPERTY

5.0' INSIDE PROPERTY

APPARENT USE BY OTHERS

4.8' INSIDE PROPERTY

4.3' INSIDE PROPERTY

3.6' INSIDE PROPERTY

APPARENT USE BY OTHERS

3.2' INSIDE PROPERTY

5.4' INSIDE PROPERTY

3.0' INSIDE PROPERTY

CONC. PAD W/ TRAFFIC SIGNAL BOX 0.8' INSIDE PROPERTY

APPARENT USE BY OTHERS

(70001) FND 4"x4" C.M. "PRM LB 6705 CREECH ENG INC"

SOUTH LINE OF 200' T.I.I.F. RESERVATION PER D.B. 31, PAGE 137

FORMER 60' RIGHT-OF-WAY ACCORDING TO THE PLAT OF STUART FARMS ABANDONED BY RESOLUTION OF THE BOARD OF COUNTY COMMISSIONERS OF MARTIN COUNTY, FLORIDA O.R.B. 1088, PAGE 588 & O.R.B. 1088, PAGE 646

EXCEPTION 7

40' RIGHT-OF-WAY ACCORDING TO THE PLAT OF STUART FARMS

Subject Right of Way

DETAIL "A"
1"=10'
SOUTH EDGE OF SIDEWALK
UTILITY LINE CROSSES AT CORNER
(70000)
11.4'
12.6'
4.3'
4.2'
11.2'
10.3'
APPARENT USE BY OTHERS

N23°40'04"W(D) N23°41'59"W(M) 614.34'

(70004) FND 4"x4" C.M. "PCP 3036" E. 0.09' 94.3'

1.4' INSIDE PROPERTY

56.7'

CROSSES PROPERTY LINE

S66°15'01"W(D) S66°11'37"W(M) 800.20'
P.C.N. 38-38-41-002-074-00000-7
O.R.B. 1888, PAGE 1271

3' GOPHER TORTOISE FENCE MEANDERS

S23°41'17"E(D) S23°44'41"E(M) 613.48'

(70003) FND 4"x4" C.M. "GCY INC LB 4108 PSM 4864" W. 0.17'

21.0'

0.5' INSIDE PROPERTY

2' GOPHER TORTOISE FENCE MEANDERS

14.6'

2.5' OUTSIDE PROPERTY

19.7'

0.5' OUTSIDE PROPERTY

33.3'

(70002) FND 4"x4" C.M. "F-170"

FENCE CORNER S. 3.3', E. 7'

60'

P.C.N. 39-38-41-019-000-00010-0
O.R.B. 2481, PAGE 1794

LOT 19
11.27± ACRES
(VACANT)
P.C.N. 40-38-41-001-014-00000-0
O.R.B. 2528, PAGE 1198

BOUNDARY SURVEY

GRAPHIC SCALE
40 0 40 80
(IN FEET)
Intended display scale:
1 inch = 40 feet

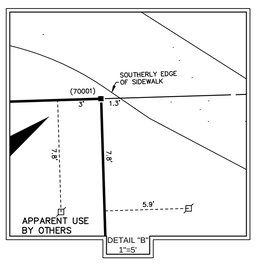

LEGEND

E	= ELECTRIC LIGHT HANDHOLE
—D—	= HANDRAIL
—O—	= CHAINLINK FENCE
—A—	= OVERHEAD UTILITY LINE
Ø	= WOOD POWER POLE
	= CONCRETE POWER POLE
	= POLE ANCHOR
C.M.	= CONCRETE MONUMENT
CONC.	= CONCRETE
	= SIGN
F	= FIBER OPTIC MARK
⊠	= LIGHT POLE
O.R.B.	= OFFICIAL RECORDS BOOK
R.C.P.	= REINFORCED CONCRETE PIPE
(TYP.)	= TYPICAL
TIIF	= TRUSTEES INTERNAL IMPROVEMENT FUND
(M)	= MEASURED
(D)	= DEED

COPYRIGHT © 2011 BY GCY, INC., PROFESSIONAL SURVEYORS AND MAPPERS

No.	Revisions	Date	By

GCY INCORPORATED
PROFESSIONAL SURVEYORS AND MAPPERS
CERTIFICATE OF AUTHORIZATION LB 4108
CORPORATE OFFICE
PO BOX 1469 • 1505 SW MARTIN HWY.
PALM CITY, FL. 34991
(800) 386-1066 • WWW.GCYINC.COM

BOUNDARY SURVEY FOR:
CLARITY POINTE DEVELOPMENT PARTNERS
MARTIN COUNTY, FLORIDA

Scale:	Date:
1"=40'	JAN. 2016
Drawn By:	Checked By:
M.F.M.	P.A.

File & Drawing No: 16-1001-01-01
Sheet 2 of 4

Drawing Name: Clarity Pointe.dwg
Page(s): 42-51 & 01-08
Field Book(s): 1767 & 1772

CITY OF STUART, FLORIDA
AGENDA ITEM REQUEST
CITY COMMISSION

Meeting Date:5/22/2017 **Prepared by:**Pinal Gandhi-Savdas

Title of Item:

ORDINANCE No. 2352-2017; AN ORDINANCE OF THE CITY OF STUART, FLORIDA, ANNEXING THREE PARCELS OF LAND WEST OF SE FEDERAL HIGHWAY, CONSISTING OF 13.57 ACRES, SAID PARCELS BEING MORE FULLY DESCRIBED IN EXHIBIT "A" ATTACHED HERETO; PROVIDING DIRECTIONS TO THE CITY CLERK; PROVIDING FOR REPEAL OF ALL ORDINANCES IN CONFLICT; PROVIDING FOR SEVERABILITY; AND PROVIDING FOR AN EFFECTIVE DATE, AND FOR OTHER PURPOSES. (RC)

Summary Explanation/Background Information on Agenda Request:

Staff has received an application to annex three parcels on the west side of SE Federal Highway. The 7.25-acre parcel owned by Stuart 13 Acres LLC, 5.74-acre parcel owned by Tierra Del Lago, Inc., and .57-acre parcel owned by Stuart Harbor Marina and Yacht Club are undeveloped. All three properties are considered contiguous to the City, are compact in form and will not create an enclave if annexed.

The City Attorney finds the attached application to be in order and in compliance with Florida Statute Section 171.044. The property owners are not proposing a development plan or schedule of development at this time. The property owners understand that a City Comprehensive Plan land use category and a PUD zoning designations will have to be applied for at a later date. In the meantime, Martin County's land use and zoning regulations remain in effect. As called for by Florida Statute, the Martin County BOCC was notified of the proposed annexation by certified mail on March 29, 2017. A complete copy of tonight's agenda item was provided to the County's Growth Management Department on Friday, April 14, 2017.

In addition to the Development Department's review, the City Manager, City Attorney, Public Works and Financial Services Department have reviewed the application without objection.

With regard to cost, annexing the subject properties will have a de minimus impact on City Services. When land use, zoning and specific development plans are proposed at a later date, a comprehensive fiscal impact analysis will occur. In the meantime, based on the as-is assessed value of the three parcels ($758,680, $800,530 and $170,000 respectively), the City's ad valorem revenues, at a current millage rate of 4.552, will be approximately $7,871.

ATTACHMENTS:

- Ordinance No. 2352-2017
- City Attorney Memorandum
- Staff Report and Maps
- Annexation Application
- Martin County Notification
- Affidavit for sign posting on site/Photos

Note: The Local Planning Agency unanimously recommended approval of this item on 04/20/17.

On May 8, 2017, the City Commission granted unanimous approval of this item on first reading.

Funding Source:

N/A

Recommended Action:

Approve Ordinance No. 2352-2017 on second reading.

ATTACHMENTS:

	Description	Upload Date	Type
🗋	Ordinance No. 2352-2017	4/13/2017	Ordinance add to Y drive
🗋	Staff Report and Maps	4/13/2017	Staff Report
🗋	Annexation Application	4/7/2017	Backup Material
🗋	Martin County Notification	4/7/2017	Backup Material
🗋	Affidavit to Notification and Photos	4/7/2017	Backup Material
🗋	Opinion Letter	4/13/2017	Attachment

Return to:

City Attorney's Office
City of Stuart
121 SW Flagler Street
Stuart, FL 34994

ORDINANCE No. 2352-2017

AN ORDINANCE OF THE CITY OF STUART, FLORIDA, ANNEXING THREE PARCELS OF LAND WEST OF SE FEDERAL HIGHWAY, CONSISTING OF 13.57 ACRES, SAID PARCELS BEING MORE FULLY DESCRIBED IN EXHIBIT "A" ATTACHED HERETO; PROVIDING DIRECTIONS TO THE CITY CLERK; PROVIDING FOR REPEAL OF ALL ORDINANCES IN CONFLICT; PROVIDING FOR SEVERABILITY; AND PROVIDING FOR AN EFFECTIVE DATE, AND FOR OTHER PURPOSES.

******

WHEREAS, Petitioners, Stuart 13 Acres LLC, a Florida limited liability company, and Tierra Del Lago, Inc., and Stuart Harbor Marina and Yacht Club, constituting the fee simple title holders of lands west of SE Federal Highway, consisting of 7.257 acres, 5.743 acres and .5739 acres respectively, more particularly described in **Exhibit "A"**, attached hereto and made a part thereof, has voluntarily requested the City of Stuart annex said lands into the corporate limits of the City; and

WHEREAS, the City Commission, has considered the Petitioner's voluntary request for annexation, and has also considered the recommendation of the Stuart Local Planning Agency and City staff.

NOW THEREFORE, BE IT ORDAINED BY THE CITY OF STUART:

Section 1. Findings. The City Commission finds the above statements are true and correct, and serve as a basis for consideration of this ordinance; that said lands are contiguous with the corporate limits of the City of Stuart, creates no enclaves, is reasonably compact, and that the City can effectively provide police, fire, and sanitary services to said land, all in compliance with the terms and requirements of Sec. 171.44, Florida Statutes, and the City of Stuart Code.

Section 2. Annexation. The City Commission has determined that development of said lands upon annexation shall be in accordance with the regulatory requirements of Martin County until such time as amendments to the City's Comprehensive Land Use Plan and Official Zoning Map become effective; and that the parcels of land more particularly described in **Exhibit "A"**, is hereby annexed into and shall be within the corporate limits of the City of Stuart, Florida, and that same shall henceforth be a part of said City as if said lands were originally a part of the City of Stuart.

Section 3. Directions to the City Clerk. The City Clerk shall cause the boundaries as set forth in the City's Charter to be amended and codified. The City Clerk shall submit such documentation as required by law to give effect to this ordinance to the Clerk of the Circuit Court, Board of County Commissioners Florida Statute 171.044(6) within 10 days prior to second reading adoption, the Chief Administrative Officer of Martin County, and the Florida Department of State within seven (7) days following adoption, in accordance with Section 171.044, Florida Statutes. Upon complete execution of this Ordinance, the City Clerk is directed to record a Certified Copy of the same in the Public Records of Martin County, Florida.

Section 4. Repeal of Conflicting Ordinances. All Ordinances, Resolutions or parts of Ordinances and Resolutions in conflict herewith are hereby repealed.

Section 5. Severability. If any word, clause, sentence, paragraph, section or part thereof contained in this Ordinance is declared to be unconstitutional, unenforceable, void or inoperative by a court of competent jurisdiction, such declaration shall not affect the validity of the remainder of this Ordinance. The corporate boundary of the City shall be re-codified to include lands annexed.

Section 6. Effective Date: This ordinance shall be effective upon its adoption.

Passed on first reading the _____ day of _____, 2017.

Commissioner _____ offered the foregoing ordinance and moved its adoption. The motion was seconded by Commissioner _____ and upon being put to a roll call vote, the vote was as follows:

	YES	NO	ABSENT
THOMAS CAMPENNI, MAYOR			
TROY MCDONALD, VICE MAYOR			
JEFFERY KRAUSKOPF, COMMISSIONER			
KELLI GLASS-LEIGHTON, COMMISSIONER			
EULA CLARKE, COMMISSIONER			

ADOPTED on second and final reading this _____ day of _____, 2017.

ATTEST:

_____
CHERYL WHITE
CITY CLERK

_____
THOMAS CAMPENNI
MAYOR

APPROVED AS TO FORM
AND CORRECTNESS:

_____
MIKE MORTELL, CITY ATTORNEY

Exhibit "A"
Legal Description, Boundary Survey, Parcel Map

PARCEL A - Stuart Harbor Marina and Yacht Club Parcel (.5739 Ac.)

LOTS 51, 52, 53, 54, AND 55, CORAL GARDENS PLAT NO. 1, ACCORDING TO THE PLAT THEREOF AS RECORDED IN PLAT BOOK 3, PAGE 21, PUBLIC RECORDS OF MARTIN COUNTY, FLORIDA.

PARCEL B - Tierra Del Lago Inc Parcel (5.7430 Ac.)

THE NORTHERLY 344.44 FEET, (MEASURING 345.77 FEET ALONG THE WESTERLY RIGHT–OF–WAY LINE OF U.S. HIGHWAY NO. 1) OF THE FOLLOWING DESCRIBED PARCEL:

ALL THAT PART OF THE FOLLOWING DESCRIBED LANDS LYING WEST OF THE WESTERLY RIGHT–OF–WAY LINE OF U.S. HIGHWAY NO. 1 THAT LIE WITHIN THE SOUTH 3/15 OF THE NORTH 9/15 OF THE SUBDIVISION OF LOTS 18, 19, AND 20 OF THE HANSON GRANT ACCORDING TO THE PLAT THEREOF FILED IN DADE COUNTY, FLORIDA, DECEMBER 30, 1901 IN BOOK "B", PAGE 59, IN THE PUBLIC RECORDS OF DADE COUNTY, FLORIDA, AND REFILED IN PALM BEACH COUNTY FLORIDA, ON MARCH 25, 1910, IN BOOK 1, PAGE 11, OF THE PUBLIC RECORDS OF PALM BEACH COUNTY, FLORIDA, SAID LANDS BEING NOW, HOWEVER, IN MARTIN COUNTY, FLORIDA, BY REDIVISION OF COUNTIES. CONTAINS 40.53 ACRES, MORE OR LESS.

LESS THEREFROM THE FOLLOWING DESCRIBED PARCEL:

COMMENCE AT THE INTERSECTION OF THE WESTERLY RIGHT–OF–WAY LINE OF SAID U.S. HIGHWAY NO. 1, AND THE SOUTH LINE OF SAID NORTH 9/15THS OF THE SUBDIVISION OF LOTS 18, 19, AND 20; THENCE SOUTH 66°17'10" WEST 727.96 FEET MEASURED (727.78 DESCRIPTION) ALONG SOUTH LINE OF SAID NORTH 9/15THS OF THE SUBDIVISION OF LOTS 18, 19, AND 20 TO THE POINT OF BEGINNING; THENCE CONTINUE SOUTH 66°17'10" WEST 1575.25 FEET ALONG SAID SOUTH LINE OF NORTH 9/15THS OF SUBDIVISION OF LOTS 18, 19, AND 20; THENCE NORTH 23°47'05" WEST 781.02 FEET TO THE NORTH LINE OF SAID SOUTH 3/15THS OF THE NORTH 9/15THS OF THE SUBDIVISION OF LOTS 18, 19, AND 20; THENCE NORTH 66°21'10" EAST 1498.84 FEET ALONG SAID NORTH LINE OF SOUTH 3/15THS OF THE NORTH 9/15THS OF THE SUBDIVISION OF LOTS 18, 19, AND 20; THENCE SOUTH 29°23'47" EAST 783.19 FEET MEASURED (782.47 DESCRIPTION) TO THE POINT OF BEGINNING. CONTAINS 27.53 ACRES, MORE OR LESS.

PARCEL C - Stuart 13 Acres LLC Parcel (7.257 Ac.)

ALL THAT CERTAIN PORTION OF THE SOUTH 3/15THS OF THE NORTH 9/15THS OF THE SUBDIVISION OF LOTS 18, 19 AND 20 OF THE HANSON GRANT, ACCORDING TO THE PLAT THEREOF FILED IN DADE COUNTY, FLORIDA, DECEMBER 30, 1901, IN BOOK "B", PAGE 59, IN THE PUBLIC RECORDS OF DADE COUNTY, FLORIDA, AND REFILED IN PALM BEACH COUNTY, FLORIDA ON MARCH 25, 1910, IN BOOK 1, PAGE 11, OF THE PUBLIC RECORDS OF PALM BEACH COUNTY, FLORIDA, SAID LANDS BEING NOW, HOWEVER, IN MARTIN COUNTY, FLORIDA, BY REDIVISION OF COUNTIES, BEING MORE PARTICULARLY DESCRIBED AS FOLLOWS:

BEGINNING AT THE INTERSECTION OF THE WESTERLY RIGHT–OF–WAY LINE OF U.S. HIGHWAY NO. 1, SAID RIGHT–OF–WAT BEING 200 FEET IN WIDTH, AND THE SOUTH LINE OF THE NORTH 9/15THS OF SAID LOTS 18, 19 AND 20; THENCE NORTHERLY TURNING 84°17'09" FROM WEST TO NORTH, FROM SAID SOUTH LINE OF THE NORTH 9/15THS OF LOTS 18, 19 AND 20, ADISTANCE OF 781.49 FEET TO THE NORTH LINE OF THE SOUTH 3/15THS OH THE SOUTH 9/15THS OF SAID LOTS 18, 19 AND 20; THENCE WESTERLY TURNING 95°47'28", FROM SOUTH TO WEST, FROM SAID WESTERLY RIGHT–OF–WAY OF U.S. HIGHWAY NO. 1, ALONG SAID NORTH LINE OF THE SOUTH 3/15THS OF THE SOUTH 9/15THS OF SAID LOTS 18, 19 AND 20, A DISTANCE OF 727.88 FEET; THENCE SOUTHERLY AND PARALLEL WITH SAID WESTERLY RIGHT–OF–WAY LINE OF U.S. HIGHWAY NO. 1 A DISTANCE OF 782.47 FEET, TO SAID SOUTH LINE OF THE NORTH 9/15THS OF SAID LOTS 18, 19 AND 20; THENCE EASTERLY ALONG SAID SOUTH LINE OF THE NORTH 9/15THS OF SAID LOTS 18, 19 AND 20 A DISTANCE OF 727.78 FEET TO THE POINT OF BEGINNING.

LESS THEREFROM LANDS DECRIBED IN PARCEL B.

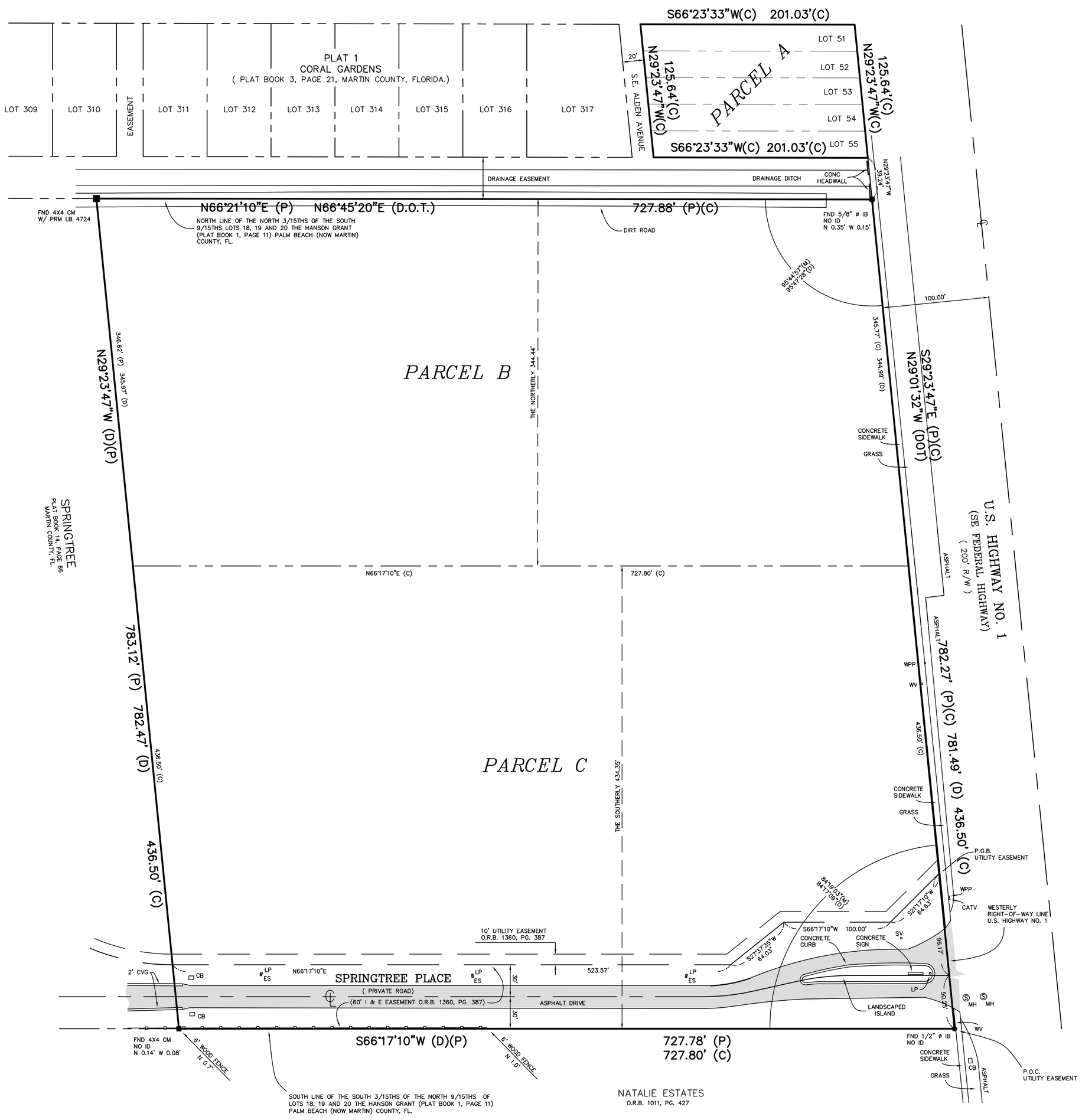

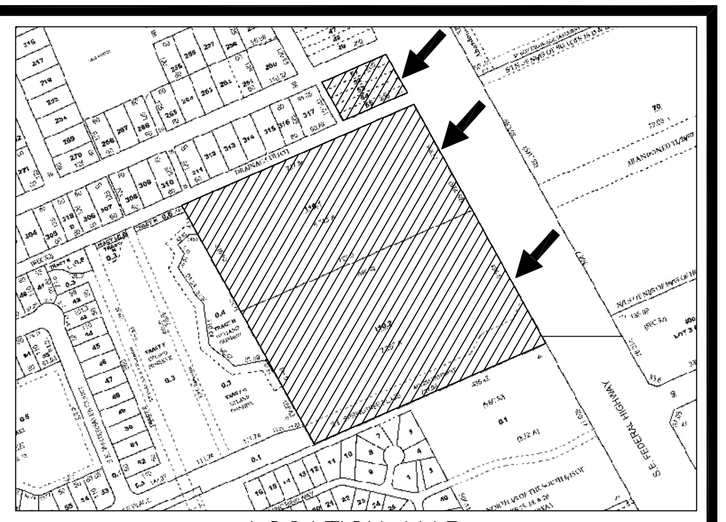

LOCATION MAP

LEGAL DESCRIPTION

PARCEL A:

LOTS 51, 52, 53, 54, AND 55, CORAL GARDENS PLAT NO. 1, ACCORDING TO THE PLAT THEREOF AS RECORDED IN PLAT BOOK 3, PAGE 21, PUBLIC RECORDS OF MARTIN COUNTY, FLORIDA.

PARCEL B:

THE NORTHERLY 344.44 FEET, (MEASURING 345.77 FEET ALONG THE WESTERLY RIGHT-OF-WAY LINE OF U.S. HIGHWAY NO. 1) OF THE FOLLOWING DESCRIBED PARCEL:

ALL THAT PART OF THE FOLLOWING DESCRIBED LANDS LYING WEST OF THE WESTERLY RIGHT-OF-WAY LINE OF U.S. HIGHWAY NO. 1 THAT LIE WITHIN THE SOUTH 3/15 OF THE NORTH 9/15 OF THE SUBDIVISION OF LOTS 18, 19, AND 20 OF THE HANSON GRANT ACCORDING TO THE PLAT THEREOF FILED IN DADE COUNTY, FLORIDA, DECEMBER 30, 1901 IN BOOK "B", PAGE 59, IN THE PUBLIC RECORDS OF DADE COUNTY, FLORIDA, AND REFILED IN PALM BEACH COUNTY FLORIDA, ON MARCH 25, 1910, IN BOOK 1, PAGE 11, OF THE PUBLIC RECORDS OF PALM BEACH COUNTY, FLORIDA, SAID LANDS BEING NOW, HOWEVER, IN MARTIN COUNTY, FLORIDA, BY REDIVISION OF COUNTIES. CONTAINS 40.53 ACRES, MORE OR LESS.

LESS THEREFROM THE FOLLOWING DESCRIBED PARCEL:

COMMENCE AT THE INTERSECTION OF THE WESTERLY RIGHT-OF-WAY LINE OF SAID U.S. HIGHWAY NO. 1, AND THE SOUTH LINE OF SAID NORTH 9/15THS OF THE SUBDIVISION OF LOTS 18, 19, AND 20; THENCE SOUTH 66°17'10" WEST 727.96 FEET MEASURED (727.78 DESCRIPTION) ALONG SOUTH LINE OF SAID NORTH 9/15THS OF THE SUBDIVISION OF LOTS 18, 19, AND 20 TO THE POINT OF BEGINNING; THENCE CONTINUE SOUTH 66°17'10" WEST 1575.25 FEET ALONG SAID SOUTH LINE OF NORTH 9/15THS OF SUBDIVISION OF LOTS 18, 19, AND 20; THENCE NORTH 23°47'05" WEST 781.02 FEET TO THE NORTH LINE OF SAID SOUTH 3/15THS OF THE NORTH 9/15THS OF THE SUBDIVISION OF LOTS 18, 19, AND 20; THENCE NORTH 66°21'10" EAST 1498.84 FEET ALONG SAID NORTH LINE OF SOUTH 3/15THS OF THE NORTH 9/15THS OF THE SUBDIVISION OF LOTS 18, 19, AND 20; THENCE SOUTH 29°23'47" EAST 783.19 FEET MEASURED (782.47 DESCRIPTION) TO THE POINT OF BEGINNING. CONTAINS 27.53 ACRES, MORE OR LESS.

PARCEL C:

ALL THAT CERTAIN PORTION OF THE SOUTH 3/15THS OF THE NORTH 9/15THS OF THE SUBDIVISION OF LOTS 18, 19 AND 20 OF THE HANSON GRANT, ACCORDING TO THE PLAT THEREOF FILED IN DADE COUNTY, FLORIDA, DECEMBER 30, 1901, IN BOOK "B", PAGE 59, IN THE PUBLIC RECORDS OF DADE COUNTY, FLORIDA, AND REFILED IN PALM BEACH COUNTY, FLORIDA ON MARCH 25, 1910, IN BOOK 1, PAGE 11, OF THE PUBLIC RECORDS OF PALM BEACH COUNTY, FLORIDA, SAID LANDS BEING NOW, HOWEVER, IN MARTIN COUNTY, FLORIDA, BY REDIVISION OF COUNTIES, BEING MORE PARTICULARLY DESCRIBED AS FOLLOWS:

BEGINNING AT THE INTERSECTION OF THE WESTERLY RIGHT-OF-WAY LINE OF U.S. HIGHWAY NO. 1, SAID RIGHT-OF-WAT BEING 200 FEET IN WIDTH, AND THE SOUTH LINE OF THE NORTH 9/15THS OF SAID LOTS 18, 19 AND 20; THENCE NORTHERLY TURNING 84°17'09" FROM WEST TO NORTH, FROM SAID SOUTH LINE OF THE NORTH 9/15THS OF LOTS 18, 19 AND 20, ADISTANCE OF 781.49 FEET TO THE NORTH LINE OF THE SOUTH 3/15THS OH THE SOUTH 9/15THS OF SAID LOTS 18, 19 AND 20; THENCE WESTERLY TURNING 95°47'28", FROM SOUTH TO WEST, FROM SAID WESTERLY RIGHT-OF-WAY OF U.S. HIGHWAY NO. 1, ALONG SAID NORTH LINE OF THE SOUTH 3/15THS OF THE SOUTH 9/15THS OF SAID LOTS 18, 19 AND 20, A DISTANCE OF 727.88 FEET; THENCE SOUTHERLY AND PARALLEL WITH SAID WESTERLY RIGHT-OF-WAY LINE OF U.S. HIGHWAY NO. 1 A DISTANCE OF 782.47 FEET, TO SAID SOUTH LINE OF THE NORTH 9/15THS OF SAID LOTS 18, 19 AND 20; THENCE EASTERLY ALONG SAID SOUTH LINE OF THE NORTH 9/15THS OF SAID LOTS 18, 19 AND 20 A DISTANCE OF 727.78 FEET TO THE POINT OF BEGINNING.

LESS THEREFROM LANDS DECRIBED IN PARCEL B.

GRAPHIC SCALE

60 0 30 60

(IN FEET)

1 inch = 60 ft.

AC	ACRE	EOP	EDGE OF PAVEMENT	N & TT	NAIL & TIN TAB	PRO	PRORATED
A/C	AIR CONDITIONER	EOW	EDGE OF WATER	N & W	NAIL & WASHER	R	RADIUS
ALUM	ALUMINUM	EM	ELECTRIC METER	NAVD	NORTH AMERICAN VERTICAL DATUMN	RAD	RADIAL
ANC	ANCHOR	ES	ELECTRIC SERVICE	NGVD	NATIONAL GEODETIC VERTICAL DATUM	RRS	RAILROAD SPIKE
APPROX	APPROXIMATE	ELEV	ELEVATION	NO ID	NO IDENTIFICATION	RNG	RANGE
AVE	AVENUE	ENCL	ENCLOSURE	NTS	NOT TO SCALE	RLS	REGISTERED LAND SURVEYOR
BRG	BEARING	X 17.00	EXISTING ELEVATION	NAD	NORTH AMERICAN DATUM	RCP	REINFORCED CONCRETE PIPE
BLK	BLOCK	FT	FEET	ORB	OFFICIAL RECORD BOOK	R/W	RIGHT OF WAY
BLVD	BOULEVARD	F	FIELD MEASUREMENT	O/S	OFFSET	SS	SANITARY SEWER
BLDG	BUILDING	FNC	FENCE	OHW	OVERHEAD WIRE	SECT	SECTION
BM	BENCHMARK	FFE	FINISHED FLOOR ELEVATION	PG	PAGE	SET I.B.	SET 5/8 IRON BAR & CAP #4049
CATV	CABLE TELEVISION BOX	FH	FIRE HYDRANT	PK	PARKER-KALON NAIL	SET MAG	SET MAG NAIL & WASHER #4049
C	CALCULATED	FPL	FLORIDA POWER & LIGHT	PK & TT	PARKER-KALON NAIL & TIN TAB	S/T	SEPTIC TANK
CB	CATCH BASIN	FND	FOUND	PK & W	PARKER-KALON NAIL & WASHER	S/W	SIDEWALK
△	CENTRAL ANGLE	GOVT	GOVERNMENT	PI/MT	PAVEMENT	SBT	SOUTHERN BELL TELEPHONE BOX
CLF	CHAINLINK FENCE	HSE	HOUSE	PRM	PERMANENT REFERENCE MONUMENT	S/F	SQUARE FEET
CHD	CHORD	I & E	INGRESS & EGRESS EASEMENT	P	PLAT	S/D	SUBDIVISION
CONC	CONCRETE	INV	INVERT	PB	PLATBOOK	T	TANGENT
CBS	CONC. BLOCK STRUCTURE	IB	IRON BAR	PCC	POINT OF COMPOUND CURVATURE	TCE	TEMPORARY CONSTRUCTION EASEMENT
CM	CONCRETE MONUMENT	IP	IRON PIPE	PC	POINT OF CURVATURE	TOB	TOP OF BANK
CNR	COULD NOT READ	IB & C	IRON BAR & CAP	PI	POINT OF INTERSECTION	TOE	TOE OF SLOPE
CPP	CONCRETE POWER POLE	IP & C	IRON PIPE & CAP	POB	POINT OF BEGINNING	TWP	TOWNSHIP
COR	CORNER	L	ARC LENGTH	POC	POINT OF COMMENCEMENT	TRANS	TRANSFORMER
COV	COVERED	LE	LANDSCAPE EASEMENT	POE	POINT OF ENCROACHMENT	TYP	TYPICAL
CMP	CORRUGATED METAL PIPE	LB	LICENSED BUSINESS NUMBER	PRC	POINT OF REVERSE CURVATURE	UDE	UTILITY & DRAINAGE EASEMENT
CVG	CONCRETE VALLEY GUTTER	LP	LIGHT POLE	PT	POINT OF TANGENCY	UE	UTILITY EASEMENT
D	DEED	M & W	MAG NAIL & WASHER	PP	POWER POLE	U/G	UNDERGROUND
D/F	DRAINFIELD	MAG	MAG NAIL	PUE	PRIVATE UTILITY EASEMENT	UP	UTILITY POLE
DE	DRAINAGE EASEMENT	ME	MAINTENANCE EASEMENT	PLS	PROFESSIONAL LAND SURVEYOR	WM	WATER METER
~~	DRAINAGE FLOW	MH	MANHOLE	R	PROPERTY LINE	WV	WATER VALVE
ESMT	EASEMENT	MHWL	MEAN HIGH WATER LINE	PROP	PROPOSED	WPP	WOOD POWER POLE
EOC	EDGE OF CONCRETE	MF	METAL FENCE	● 17.00	PROPOSED ELEVATION	ø	DIAMETER

1. PROPERTY ADDRESS:

2. CERTIFIED TO:

NOT VALID WITHOUT THE SIGNATURE AND THE ORIGINAL RAISED SEAL OF A FLORIDA LICENSED SURVEYOR AND MAPPER.

STEPHEN J. BROWN, INC

STEPHEN J. BROWN, PROFESSIONAL SURVEYOR AND MAPPER
REGISTRATION NO. 4049, STATE OF FLORIDA

Date of field survey:
09/08/2010

NOTES:

1. Survey of description as furnished by Client.
2. Lands shown hereon were not abstracted for easements and/or rights-of-way of record.
3. All bearings are referenced to the South line of subject property, platted as S66°17'10"W, all others relative thereto.
4. Elevations shown hereon are relative to North American Vertical Datum of 1988, and are based on bench mark N/A.
5. There are no above ground encroachments, unless otherwise shown.
6. The National Flood Insurance Program designation as indicated on the F.E.M.A. Map No. 12085C0164G & 12085C0163G, dated 03/16/2015, locates the parcel in Zone X, base flood elevation N/A feet; subject to any scaling and interpolation factors associated with mapping of this accuracy. This data is an interpretation by the surveyor and is provided as a courtesy. The flood zone(s) should be verified by a determination agency.
7. Underground foundations & utilities not located unless shown.

REVISIONS	BY

STEPHEN J. BROWN, INC
SURVEYORS • DESIGNERS • LANDPLANNERS • CONSULTANTS
619 EAST 5TH STREET, STUART, FLORIDA 34994 EMAIL: sjbinc@bellsouth.net PHONE: (772)-288-7176
LICENSED BUSINESS NUMBER:6484

BOUNDARY SURVEY

DRAWN	R.F.C.
CHECKED	S.J.B.
DATE	04/10/2017
SCALE	1" = 60'
JOB NO.	1054-33-03
SHEET	ONE

OF ONE SHEETS

PARCEL MAP

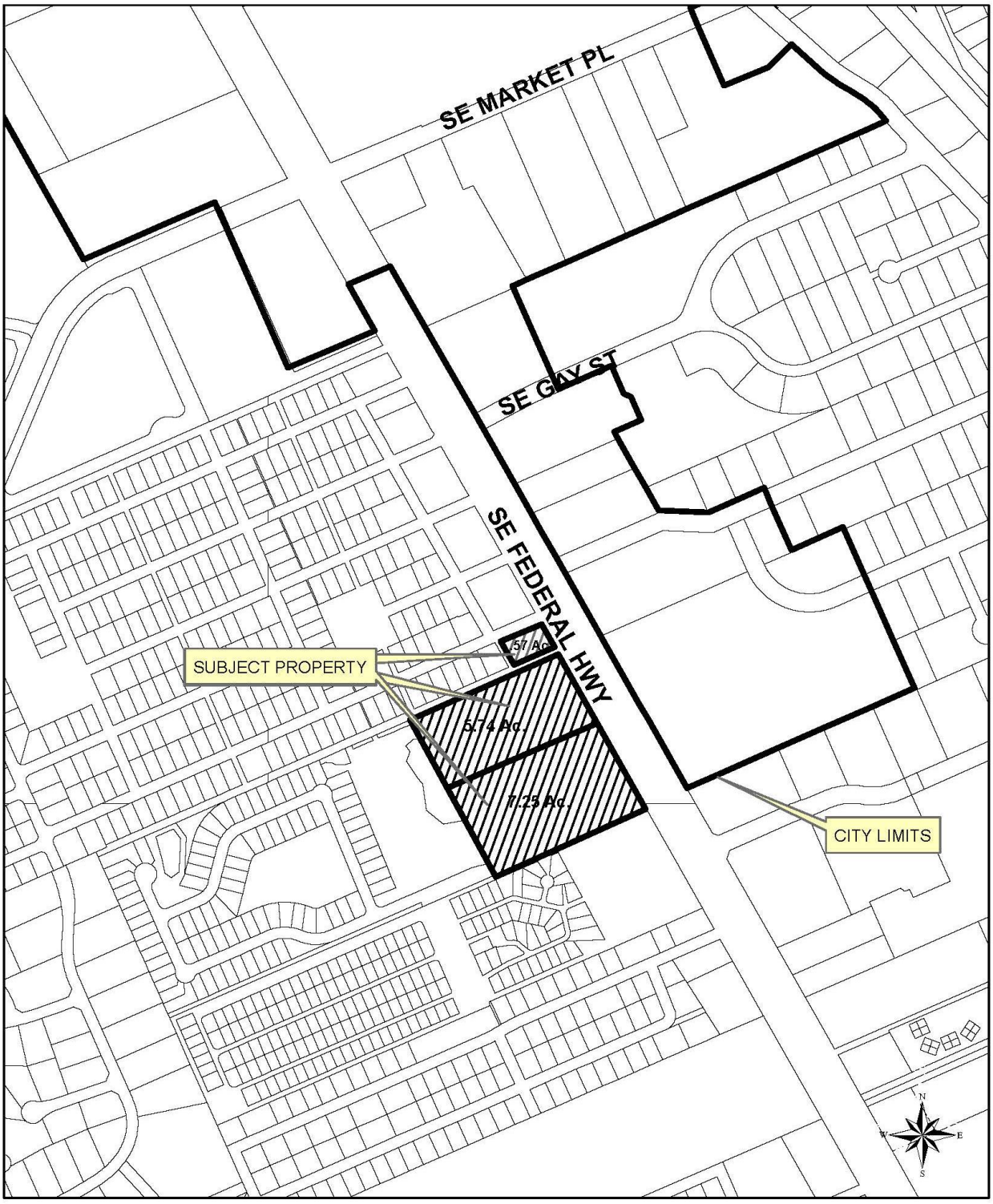
SE MARKET PL
SE GAY ST
SE FEDERAL HWY
SUBJECT PROPERTY
.57 Ac.
5.74 Ac.
7.25 Ac.
CITY LIMITS
N
W
E
S

STAFF REPORT & MAPS

Background:

The City has received application to annex three parcels on the west side of SE Federal Highway. The 7.25-acre parcel owned by Stuart 13 Acres LLC, 5.74-acre parcel owned by Tierra Del Lago, Inc., and .57-acre parcel owned by Stuart Harbor Marina and Yacht Club are undeveloped. All three properties are considered contiguous to the City, are compact in form and will not create an enclave if annexed.

The City Attorney finds the attached application to be in order and in compliance with Florida Statute Section 171.044. The property owners are not proposing a development plan or schedule of development at this time. The property owners understand that a City Comprehensive Plan land use category and a PUD zoning designations will have to be applied for at a later date. In the meantime, Martin County's land use and zoning regulations remain in effect. As called for by Florida Statute, the Martin County BOCC was notified of the proposed annexation by certified mail on March 29, 2017. A complete copy of tonight's agenda item was provided to the County's Growth Management Department on Friday, April 14, 2017.

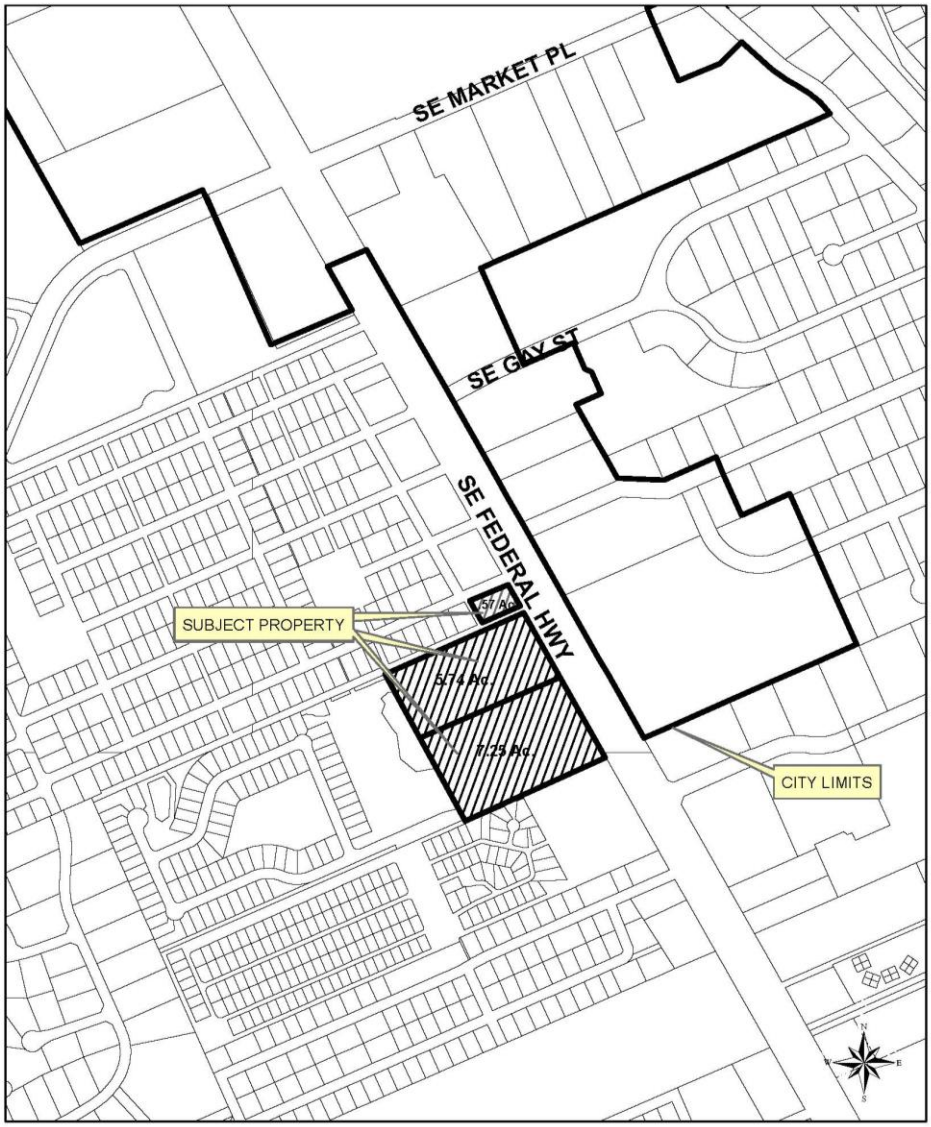

Parcel Information

	Size (Ac)	Status	County Land Use	County Zoning	City Land Use	City Zoning	Utilities
Stuart 13 Acres, LLC	7.257	Vacant, undeveloped	Commercial Limited	R-2 (Single-Family Residential District) and R-3A (Liberal Multi-Family)	TBD (Likely commercial)	TBD (Likely CPUD)	County to provide water & sewer service and City of Stuart to provide sanitation service
Tierra Del Lago, Inc.	5.743	Vacant, undeveloped	Commercial Limited	R-2 (Single-Family Residential District) and R-3A (Liberal Multi-Family)	TBD (Likely commercial)	TBD (Likely CPUD)	County to provide water & sewer service and City of Stuart to provide sanitation service
Stuart Harbor Marina & Yacht Club	.5739	Vacant, undeveloped	Commercial General	R-3A (Liberal Multi-Family)	TBD (Likely commercial)	TBD (Likely CPUD)	County to provide water & sewer service and City of Stuart to provide sanitation service

County Land Use

Limited Commercial development. Limited Commercial development is allocated to commercial sites accessible to major thoroughfares near residential neighborhoods. The scale and intensity of commercial uses in Limited Commercial areas shall be compatible with adjacent residential neighborhoods. Sites in this designation are intended for shops with limited inventory of goods as well as transient lodging facilities consistent with the CGMP and the Land Development Regulations. This designation is not generally intended to accommodate residential development. Duly approved residential uses existing at the effective date of the CGMP shall be considered permitted uses.
Areas designated for Limited Commercial development are not intended to accommodate large-scale retail sales, service or trade activities that generally serve a larger market area. Such stores would usually require a larger floor area, carry a relatively larger inventory and require a substantially greater parking area.

Land Development Regulations implementing the Limited Commercial future land use designation shall be consistent with these development standards. Minimum net lot sizes shall be 10,000 square feet. FAR shall be governed by the parking standards of the Land Development Regulations. Maximum

densities for hotel/motel units shall be 20 units per gross acre. Maximum building coverage shall be 50 percent. Minimum open space shall be 30 percent. Maximum building height shall be 30 feet. Residential use shall be allowed in the Limited Commercial future land use designation as part of a mixed-use project in any of the seven CRAs designated in Policy 4.2B.4. Residential densities shall be as provided for in Policy 4.3A.3.

General Commercial development. The General Commercial areas are designated on the Future Land Use Map to accommodate general retail sales and services; highway-oriented sales and services; commercial amusement; and trade and warehousing facilities. These areas are principally located in highly accessible parts of the urban service district that are compatible with the unique location and market requirements of these uses. The sites are located on major or minor arterials and require a minimum net lot size of 10,000 square feet. The FAR shall be governed by the parking standards of the Land Development Regulations. Maximum densities for hotel/motel units located in a General Commercial future land use designation shall be 20 units per gross acre. Maximum building coverage shall be 60 percent. Minimum open space shall be 20 percent. Maximum building height shall be 40 feet.

The Land Development Regulations implementing the General Commercial future land use designation shall be consistent with the development standards described above. This area is not intended to accommodate businesses, trades or services that generate significant nuisance impacts, including glare, smoke or other air pollutants; noise; vibration; major fire hazards; need for extensive outside storage and display; or other impacts associated with more intensive industrial uses. Automotive sales and services shall be located in the General Commercial land use classification on sites appropriately designated for highway-oriented commercial uses in the Land Development Regulations.

The areas designated for General Commercial development are specifically not adapted to permanent residential housing, and such uses shall be located in other areas designated for residential development. On the other hand, transient residential facilities including hotels and motels, timesharing or fractional fee residential complexes, or other transient quarters should be located in areas designated for commercial use. Areas planned for mixed-use developments as allowed under Goal 4.3 are considered compatible for mixed use.

The General Commercial site should generally be removed from single-family residential development and able to be buffered and screened consistent with the Land Development Regulations requiring appropriate landscaping and screening. Screening shall include vegetative berms (where feasible), plant material and/or aesthetic decorative fences or walls to assure compatibility with less intensive uses existing or anticipated on adjacent sites.

Residential use shall be allowed in the General Commercial future land use designation as part of a mixed-use project as allowed under Goal 4.3 in any of the seven CRAs designated in Policy 4.2B.4. Residential densities shall be provided for under Goal 4.3.

Prior to approval of a development plan, all applicants for development in the area designated General Commercial shall provide assurances that regional water distribution and wastewater collection utilities shall be provided by a regional public utility system.

County Zoning

R-2 Single-Family Residential District (Category "B" District)

PERMITTED USES

Modular homes; Single-family detached dwellings; Community centers; Educational institutions; Neighborhood assisted residences with six or fewer residents; Places of worship; Protective and emergency services; Public libraries, Pubic parks and recreation area, active; Public parks and recreation areas, passive; Utilities; Bed and breakfast inns; Commercial day care; Family day care; Golf courses.

R-3A Liberal Multi-Family District (Category "C" District)

Uses Permitted. In this district, a building or structure or land shall be used for only the following purposes, subject to any additional limitations pursuant to section 3.402:

1. Any uses permitted in the R-3 Multiple-Family Residential District.
2. Restaurants and/or lunchrooms, not the drive-in type, with an enclosed seating capacity of ten persons or more.
3. Beauty parlors and barbershops.
4. Dry cleaning and laundry pickup stations.
5. Fire stations.
6. Boat docks and dry and wet storage facilities under cover, and facilities for maintenance and repairs of boats or yachts, upon submission of plans for review and approval of the planning and zoning board.
7. Mobile home and travel trailer sales.
8. Gasoline or other motor fuel stations, provided all structures and buildings, except principal use signs, and including storage tanks shall be placed not less than 25 feet from any side or rear property lines.
9. Professional and business offices.
10. Retail stores.

Required lot area and width. Lots or building sites shall have an area of not less than 7,500 square feet, with a minimum width of 60 feet measured at the building line:

1. *Single-family structures:* The minimum lot size shall be the same as above. A minimum of 600 square feet of living area shall be required, exclusive of carports, breezeways or utility rooms.
2. *Two-family structures:* The minimum lot size shall be 7,500 square feet, with a minimum width of 75 feet a minimum of 800 square feet of living area per two-family structure shall be required, exclusive of carports, breezeways or utility rooms.
3. *Apartment buildings:* There shall be a minimum building site of 15,000 square feet with a minimum width of 100 feet measured at the building line for the first four apartment units. For each additional apartment unit, 2,600 square feet shall be added to the required minimum building site and an additional five feet shall be added to the required minimum width at the building line. A maximum density of 15 apartment units may be permitted per acre depending on available community services and capital improvements. There shall be a minimum of 325 square feet of living area in each apartment unit.

4. *Triplex structures:* The minimum lot size shall be 11,250 square feet, with a minimum width of 88 feet; a minimum of 1,200 square feet of living area per three-family structure shall be required, exclusive of carports, breezeways or utility rooms.

Minimum yards required.

1. *Front:*

   1 story: 20 feet.
   2 stories: 25 feet.

2. *Sides and rear:*

   1 story: 6 feet.
   2 stories: 10 feet.

3. For structures in excess of two stories, five feet shall be added to the required yards per story.
4. No structure shall be built within 50 feet of the center line of any public platted right-of-way not a designated through-traffic highway.
5. No structure shall be built within 65 feet of the center line of a designated through-traffic highway.
6. No setback or yard shall be required adjacent to water frontage.

Building height regulations.

1. The maximum building height in this district shall be four stories or 40 feet.

Percentage of land coverage.

1. One- to four-story dwelling structures and accessory structures shall not occupy more than 30 percent of the building site required.

MARTIN COUNTY
FUTURE LAND USE MAP

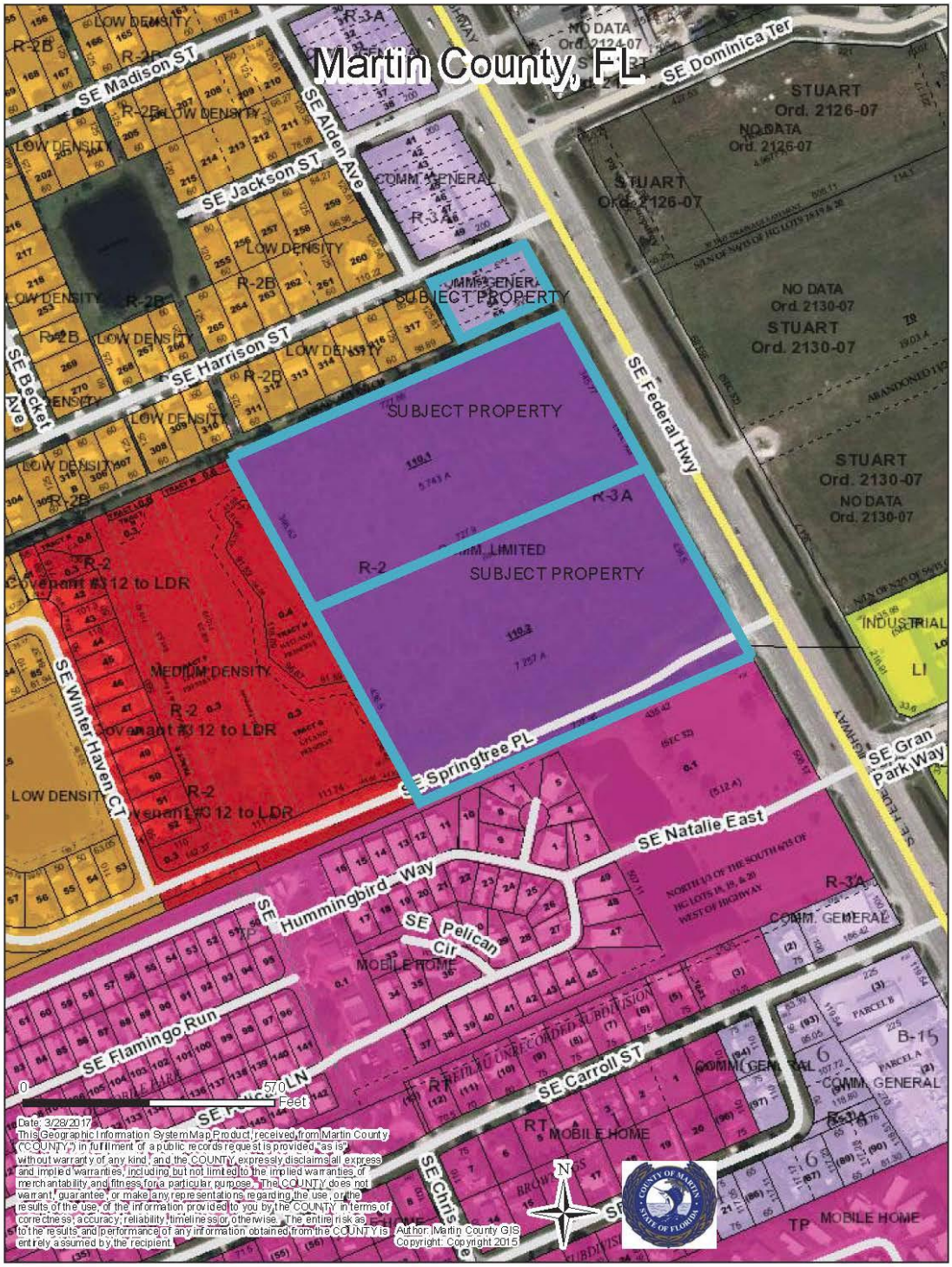

MARTIN COUNTY
ZONING MAP

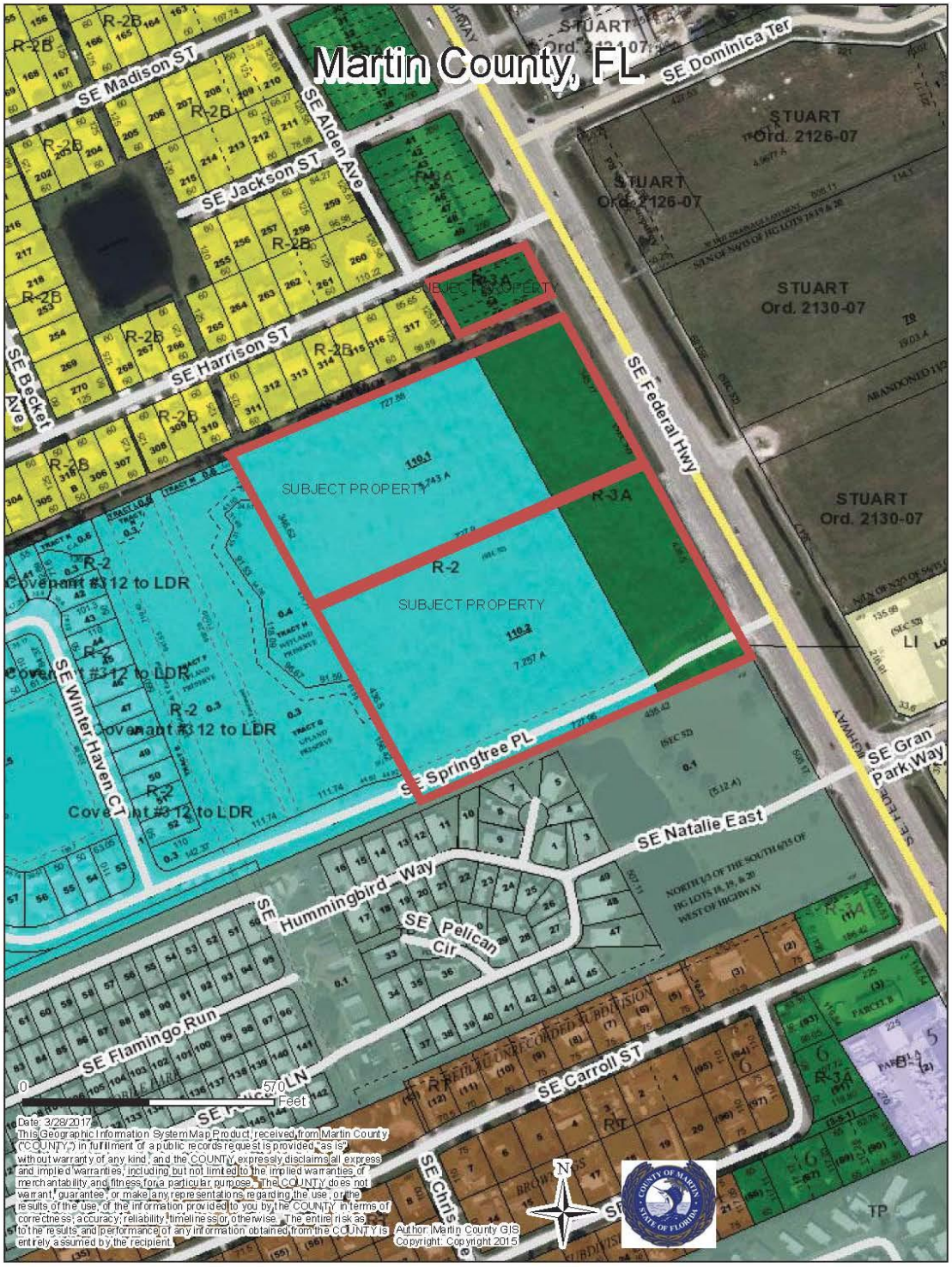

CITY OF STUART
FUTURE LAND USE MAP

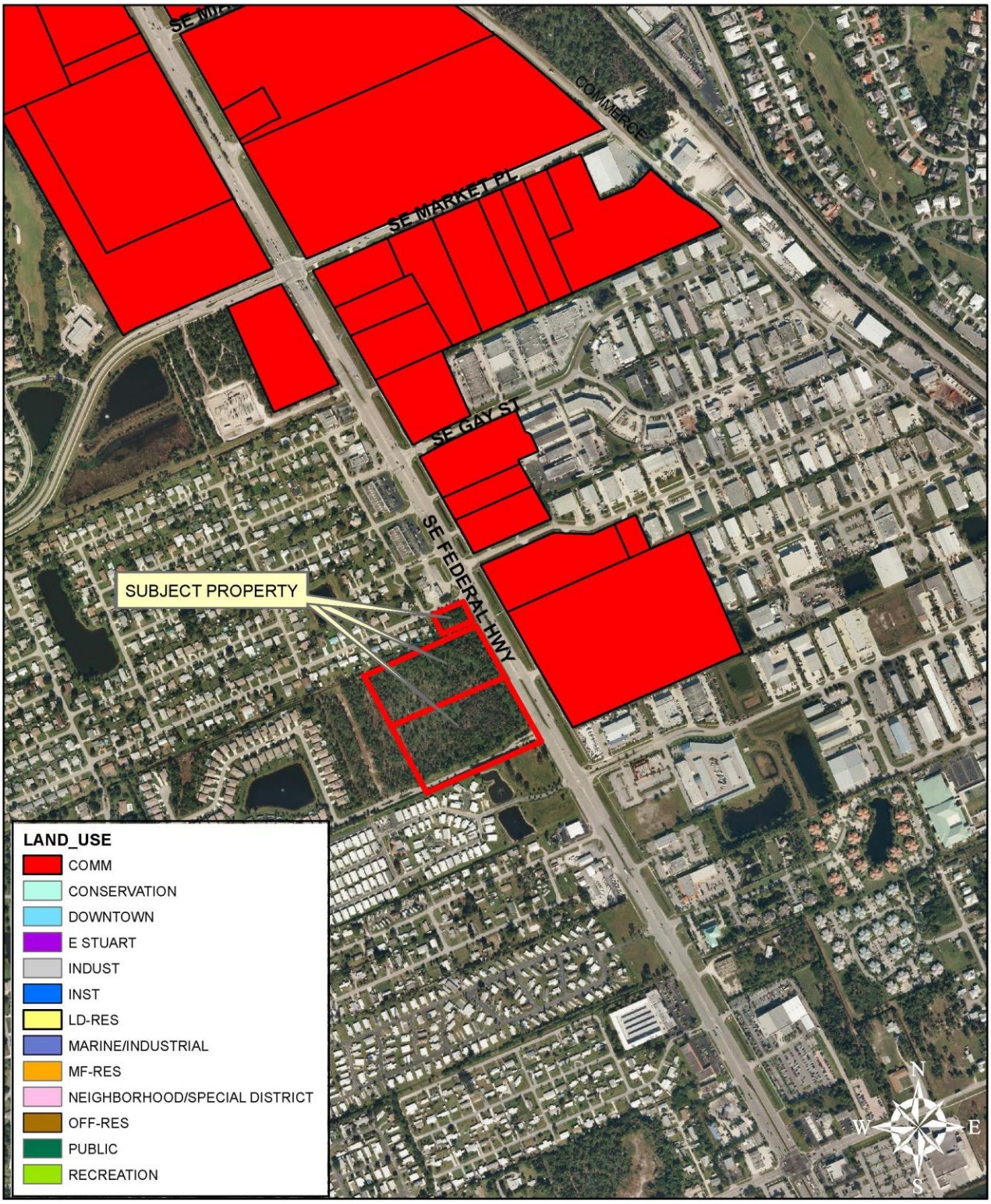

CITY OF STUART
ZONING MAP

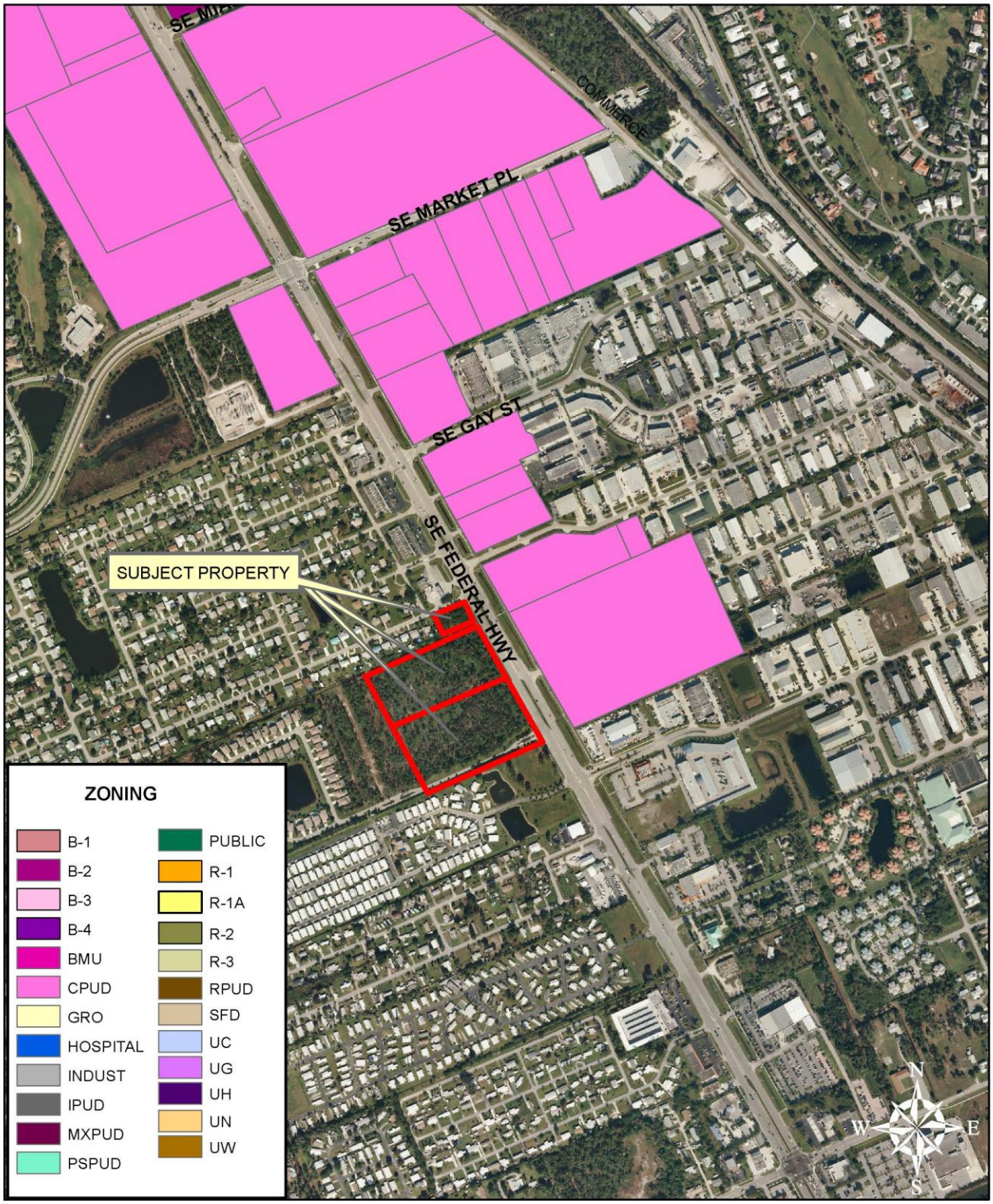

City of Stuart
121 SW Flagler Ave.
Stuart, FL 34994
development@ci.stuart.fl.us
(772) 288-5326

Received by: _____
Reviewed by: [illegible]
Approved by: _____

Annexation Application

Project ID# Z1703000 4
(Staff Entry)

MAR 1[illegible] 2017

Pre-App Conference Date:	Application Date: March 20, 2017
Project Name: Stuart 13 acres	
Parcel ID# 52-38-41-000-000-01102-0	Project Address: SE FEDERAL HIGHWAY, STUART
Zoning/CRA Sub-district:	
Subdivision: HANSON GRANT S/D	Lot(s): LOTS 18 19 20 S 1/3 OF N 9/15 W OF US 1

Fee: $1,792.00 *(this does not include fees that may be charged as a result of application review by the City's consultants or any required recording fees)*

Submittal Requirements:

A. Completed application form;
B. Payment of fees;
C. A concept plan;
D. An estimate of the direct public costs to provide capital facilities for City utilities and other municipal services required by the development;
E. An estimate of the ad valorem tax revenues to be generated by the subject property at the current millage rate both prior to and after development;
F. An estimate of the residential population increase of the City after development; and
G. Any other information as may be required by the City Development Director in order to do a thorough review of the request.
H. One (1) copy of all documents on a PDF formatted disc electronically signed and sealed.

(The data requirements for a concept plan are available at the Development Department)

Approving Authority: The Development Director is required to prepare a staff report and recommendation concerning this application. For a Major PUD amendment, the Local Planning Agency (LPA) is required to hold an advertised public hearing and formulate a recommendation to the City Commission. For both types of applications, the City Commission is required to hold an advertised public hearing after which it may approve, approve with conditions, or deny the application.

Justification: Please explain how the proposed annexation would further the relevant goals, objectives, and policies of the City's comprehensive plan *(include additional pages if needed).*

(over)

General Information

(Please Print or Type)

1. Property Owner, Lessee, Contract Purchaser, or Applicant (circle one):

Name: Boyd G. Bradfield, Jr.	City/State/Zip Code: Stuart, FL 34994
Title: Manager	Telephone Number: 772-215-2538
Company: STUART 13 ACRES LLC	Facsimile Number: 772-286-7535
Company Address: 2055 S. Kanner Hwy.	Email Address (optional): boyd@naisouthcoast.com

2. Agent of Record (if any): The following individual is designated as the Agent of Record for the property owner, lessee, or contract purchaser and should receive all correspondence related to the application review.

Name: Boyd G. Bradfield, Jr	City/State/Zip Code: Stuart, FL 34994
Title: President	Telephone Number: 772-215-2538
Company: NAI Southcoast	Facsimile Number: 772-286-7535
Company Address: 2055 S. Kanner Hwy.	Email Address (optional): boyd@naisouthcoast.com

3. The Undersigned, as the Property Owner, Lessee, Contract Purchaser, or Applicant (circle one), acknowledges responsibility for all City expenses associated with the referenced application (s) including time spent by the City's consultants and further acknowledges that payment of consultant fees will be made prior to the receipt of the consultant comments.

Name: Boyd G. Bradfield, Jr.	City/State/Zip Code: Stuart, FL 34994
Title: Manager	Telephone Number: 772-215-2538
Company: STUART 13 ACRES LLC	Facsimile Number: 772-286-7535
Company Address: 2055 S KANNER HWY	Email Address (optional): boyd@naisouthcoast.com

I hereby certify that all information contained herein is true and correct.

4. Signed this 15 day of MARCH, 20 17.

MGR

Signature of Property Owner, Lessee, Contract Purchaser or Applicant (circle one)

State of Florida, Martin County The foregoing instrument was acknowledged before me on this 15th day of MARCH 2017 by BOYD BRADFIELD who is personally known to me, or who has produced _____ as identification and who did/did not take an oath.

Notary Signature

Commission Expires:

LAURIE KURNICK
MY COMMISSION # FF 953424
EXPIRES: January 29, 2020
Bonded Thru Notary Public Underwriters

PETITION FOR ANNEXATION

I, Richard A. Wright President for Tierra Del Lago, Inc., being the sole title owner of the 5.743 acres of land described in the deed attached hereto as Exhibit "A," and located at SE Federal Hwy, Stuart, Florida, bearing Parcel Control No. 52-38-41-000-000-01101-0, hereby petition the City of Stuart to have said land annexed into the City.

In addition, I wish to join in the annexation application for the real property to the west of mine by STUART 13 ACRES LLC, bearing Parcel Control No. 52-38-41-000-000-01102-0.

Richard A. Wright
President
Tierra Del Lago, Inc.

STATE OF FLORIDA §
COUNTY OF MARTIN §

This PETITION FOR ANNEXATION was acknowledged before me on March 15th, 2017 by Richard A. Wright, the owner of the said property. ~~She~~ HE is personally known to me or has produced DRIVER LICENSE as identification.

[SEAL]

Notary Public, State of Florida
My Commission Expires:

LAURIE KURNICK
MY COMMISSION # FF 95[illegible]
EXPIRES: January 29, 2[illegible]
Bonded Thru Notary Public Underwri[illegible]

PETITION FOR ANNEXATION

I, Richard A. Wright President for STUART HARBOR MARINA AND YACHT CLUB, being the sole title owner of the .5739acres of land described in the deed attached hereto as Exhibit "A," and located at Federal Hwy & Harrison , Stuart, FL , bearing Parcel Control No. 52-38-41-005-000-00510-3, hereby petition the City of Stuart to have said land annexed into the City.

In addition, I wish to join in the annexation application for the real property to the west of mine by STUART 13 ACRES LLC, bearing Parcel Control No. 52-38-41-000-000-01102-0.

Richard A. Wright
President
STUART HARBOR MARINA AND YACHT CLUB

STATE OF FLORIDA §
COUNTY OF MARTIN §

This PETITION FOR ANNEXATION was acknowledged before me on March 15th, 2017 by Richard A. Wright, the owner of the said property. He is personally known to me or has produced DRIVERS LICENSE as identification.

[SEAL]

Notary Public, State of Florida
My Commission Expires:

LAURIE KURNICK
MY COMMISSION # FF 953424
EXPIRES: January 29, 2020
Bonded Thru Notary Public Underwriters

Boundary Survey for:
TIERRA DEL LAGO

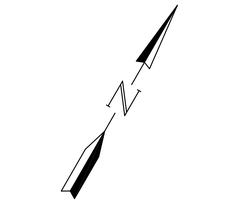

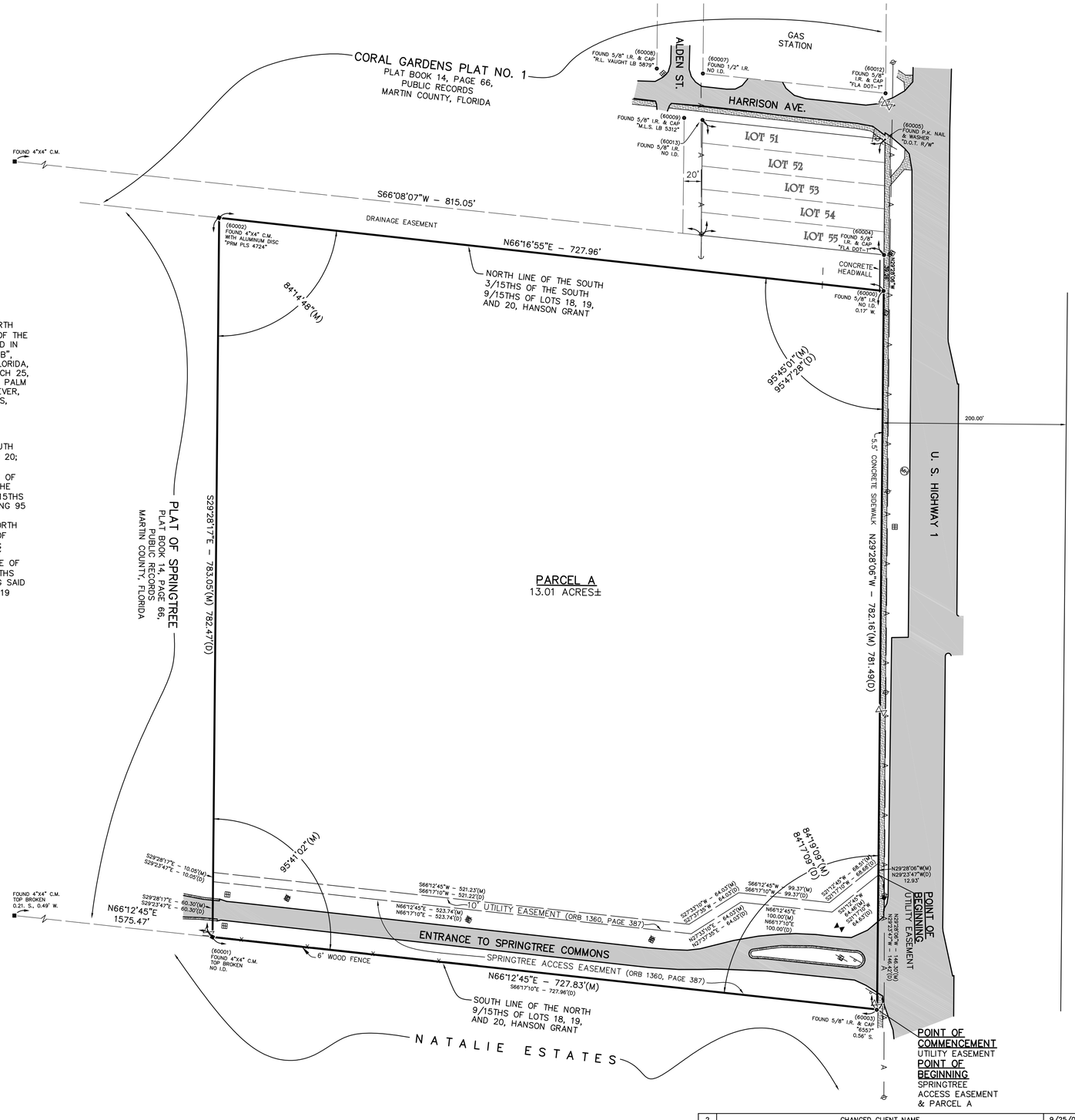

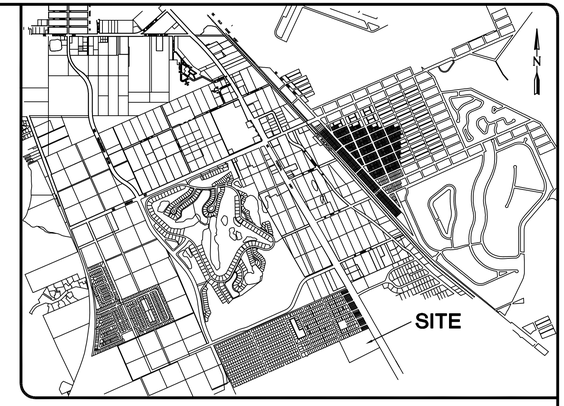

LOCATION MAP
NOT-TO-SCALE

LEGAL DESCRIPTION

PARCEL A:

ALL THAT PORTION OF THE SOUTH 3/15THS OF THE NORTH 9/15THS OF THE SUBDIVISION OF LOTS 18, 19 AND 20 OF THE HANSON GRANT, ACCORDING TO THE PLAT THEREOF FILED IN DADE COUNTY, FLORIDA, DECEMBER 30, 1901, IN BOOK "B", PAGE 59, IN THE PUBLIC RECORDS OF DADE COUNTY, FLORIDA, AND REFILED IN PALM BEACH COUNTY, FLORIDA ON MARCH 25, 1910, IN BOOK 1, PAGE 11, OF THE PUBLIC RECORDS OF PALM BEACH COUNTY, FLORIDA, SAID LANDS BEING NOW, HOWEVER, IN MARTIN COUNTY, FLORIDA, BY REDIVISION OF COUNTIES, BEING MORE PARTICULARLY AS FOLLOWS:

BEGINNING AT THE INTERSECTION OF THE WESTERLY RIGHT-OF-WAY LINE OF U.S. HIGHWAY NO. 1, SAID RIGHT-OF-WAY BEING 200 FEET IN WIDTH, AND THE SOUTH LINE OF THE NORTH 9/15THS OF SAID LOTS 18, 19 AND 20; THENCE NORTHERLY TURNING 84 17'09" FROM WEST TO NORTH, FROM SAID SOUTH LINE OF THE NORTH 9/15THS OF LOTS 18, 19 AND 20, A DISTANCE OF 781.49 FEET TO THE NORTH LINE OF THE SOUTH 3/15THS OF THE SOUTH 9/15THS OF SAID LOTS 18, 19 AND 20; THENCE WESTERLY TURNING 95 47'28", FROM SOUTH TO WEST, FROM SAID WESTERLY RIGHT-OF-WAY OF U.S. HIGHWAY NO. 1, ALONG SAID NORTH LINE OF THE SOUTH 3/15THS OF THE SOUTH 9/15THS OF SAID LOTS 18, 19 AND 20, A DISTANCE OF 727.88 FEET; THENCE SOUTHERLY AND PARALLEL WITH SAID WESTERLY RIGHT-OF-WAY LINE OF U.S. HIGHWAY NO. 1 A DISTANCE OF 782.47 FEET, TO SAID SOUTH LINE OF THE NORTH 9/15THS OF SAID LOTS 18, 19 AND 20; THENCE EASTERLY ALONG SAID SOUTH LINE OF THE NORTH 9/15THS OF SAID LOTS 18, 19 AND 20 A DISTANCE OF 727.78 FEET TO THE POINT OF BEGINNING.

CONTAINING 13.01 ACRES MORE OR LESS.
PARCEL ID: 52-58-41-000-00-01100-1

SURVEYOR'S NOTES:

1. BEARINGS SHOWN HEREON ARE REFERENCED TO THE STATE PLANE COORDINATE SYSTEM, FLORIDA EAST ZONE, NORTH AMERICAN DATUM OF 19834, ADJUSTMENT OF 1999 AND ARE FURTHER REFERENCED TO THE WESTERLY RIGHT-OF-WAY OF U.S. HIGHWAY NO.1, HAVING A BEARING OF NORTH 29°28'06" WEST AND ALL OTHERS ARE RELATIVE THERETO.
2. ALL VISIBLE ABOVE GROUND IMPROVEMENTS HAVE BEEN LOCATED.
3. THERE HAS BEEN NO ATTEMPT TO LOCATE ANY UNDERGROUND UTILITIES OR IMPROVEMENTS.
4. THIS PROPERTY IS LOCATED IN FLOOD ZONE "X" ACCORDING TO FLOOD INSURANCE RATE MAP COMMUNITY PANEL NO.'S 12085C0164F & 12085C0163F, DATED OCTOBER 4, 2002.
5. THIS SURVEY WAS PREPARED WITHOUT THE BENEFIT OF A TITLE POLICY AND THERE MAY BE ENCUMBRANCES THAT AFFECT THIS PROPERTY RECORDED IN THE PUBLIC RECORDS OF MARTIN COUNTY, FLORIDA.

CERTIFICATION

(NOT VALID WITHOUT THE SIGNATURE AND ORIGINAL RAISED SEAL OF A FLORIDA LICENSED SURVEYOR AND MAPPER)

I HEREBY CERTIFY THAT THE SURVEY OF THE PROPERTY SHOWN AND DESCRIBED HEREON WAS COMPLETED UNDER MY DIRECTION AND SAID SURVEY IS TRUE AND CORRECT TO THE BEST OF MY KNOWLEDGE AND BELIEF.

I FURTHER CERTIFY THAT THIS SURVEY MEETS THE MINIMUM TECHNICAL STANDARDS FOR SURVEYS SET FORTH BY THE FLORIDA BOARD OF PROFESSIONAL SURVEYORS AND MAPPERS IN CHAPTER 61G17-6, FLORIDA ADMINISTRATIVE CODE, PURSUANT TO SECTION 472.027 FLORIDA STATE STATUTES. NO SEARCH OF THE PUBLIC RECORDS HAS BEEN MADE BY THIS OFFICE. THE SURVEY IS BASED ON INFORMATION FURNISHED BY CLIENT OR CLIENT'S REPRESENTATIVE.

8/06/07
DATE OF SURVEY

DATE OF SIGNATURE

PETER ANDERSEN
PROFESSIONAL SURVEYOR AND MAPPER
FLORIDA CERTIFICATE NO. 5199

LEGEND

ORB	= OFFICIAL RECORDS BOOK
C.M.	= CONCRETE MONUMENT
I.R.	= IRON ROD
—A—	= AERIAL UTILITY LINES
—X—	= FENCE LINE
E	= ELECTRIC BOX
S	= SANITARY MANHOLE
W	= WATER VALVE
CB	= CATCH BASIN
S	= SIGN
LP	= LIGHT POST
CB	= CABLE BOX
WP	= WOOD POWER POLE

No.	Revisions	Date	By
2	CHANGED CLIENT NAME	9/25/07	SAS
1	REMOVED PARCEL "B"	9/25/07	SAS

GCY INCORPORATED
PROFESSIONAL SURVEYORS AND MAPPERS
CERTIFICATE OF AUTHORIZATION LB 4108
CORPORATE OFFICE
PO BOX 1469 • 1505 SW MARTIN HWY.
PALM CITY, FL 34991
(800) 386-1066
TALLAHASSEE OFFICE
1990 COMMONWEALTH LANE
TALLAHASSEE, FL 32303
(850) 536-8455

BOUNDARY SURVEY FOR:
TIERRA DEL LAGO
MARTIN COUNTY, FLORIDA

Scale:	Date:
1"=100'	AUG. 2007
Drawn By:	Checked By:
SAS	PA

File & Drawing No: 07-1071-01-01
Sheet 1 of 1

Page: 54-61
Field Book: 1432
Drawing Name:

COPYRIGHT © 2006 BY GCY, INC., PROFESSIONAL SURVEYORS AND MAPPERS

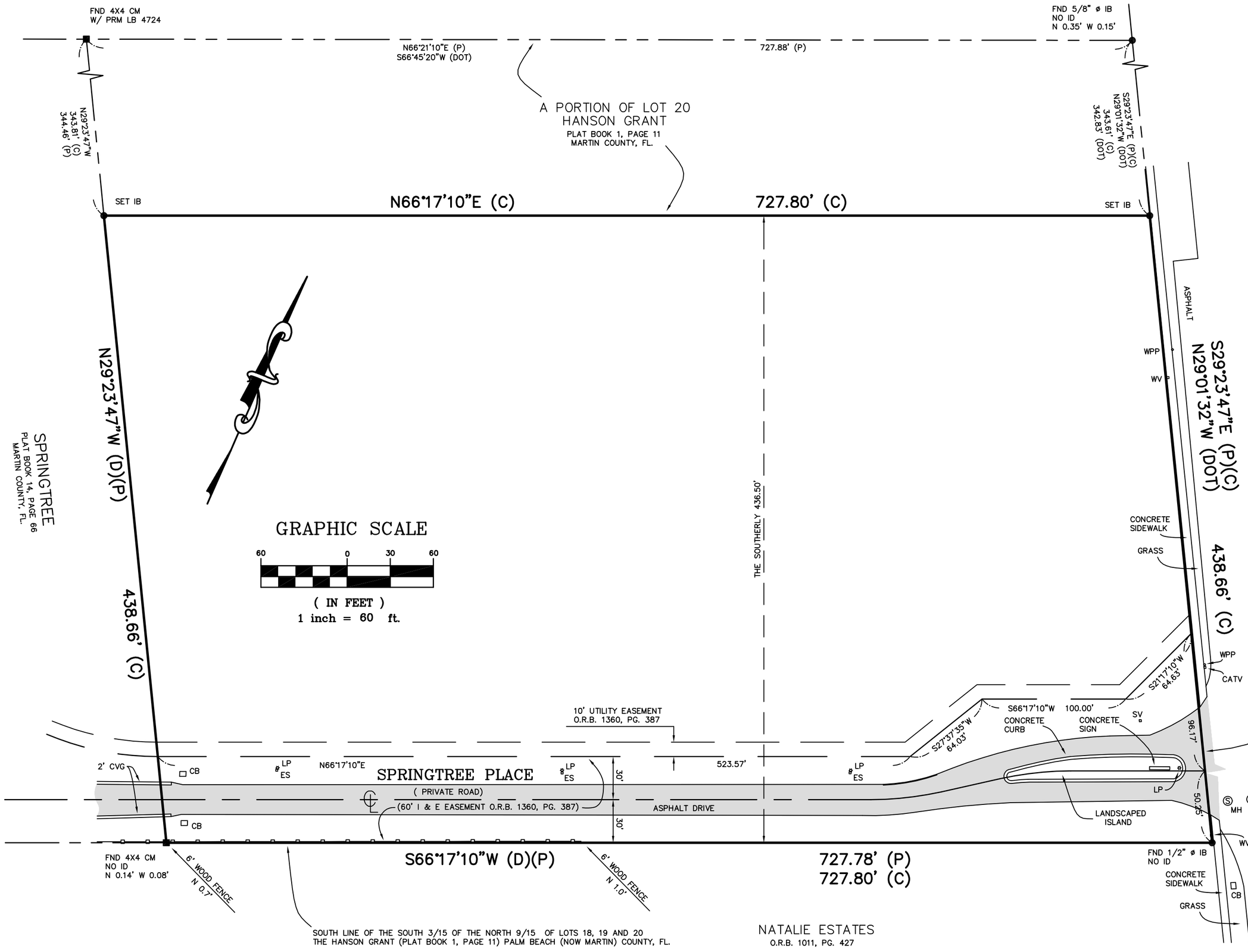

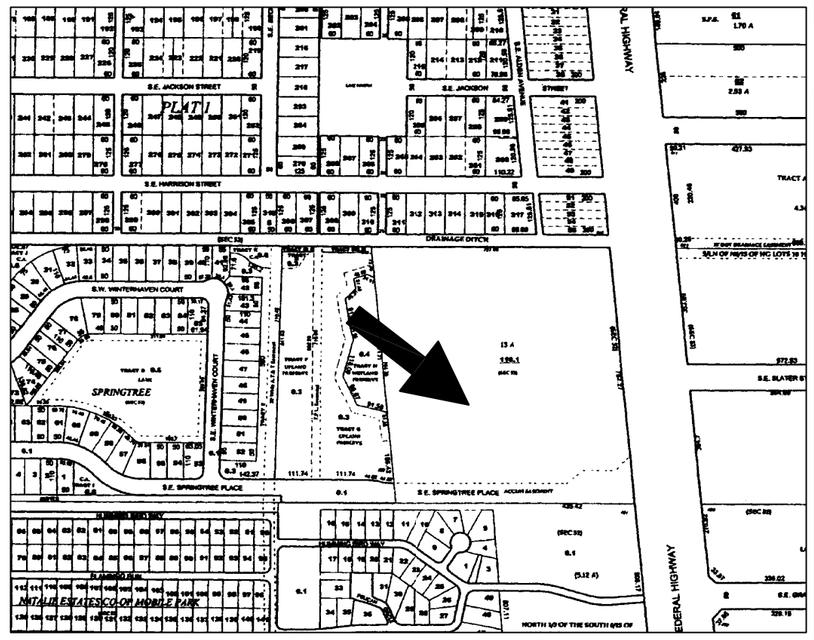

LOCATION MAP

LEGAL DESCRIPTION

THE SOUTH 436.50 FEET OF THE FOLLOWING DESCRIBED PARCEL:

ALL THAT PART OF THE FOLLOWING DESCRIBED LANDS LYING WEST OF THE WESTERLY RIGHT-OF-WAY LINE OF U.S. HIGHWAY NO. 1 THAT LIE WITHIN THE SOUTH 3/15 OF THE NORTH 9/15 OF THE SUBDIVISION OF LOTS 18, 19, AND 20 OF THE HANSON GRANT ACCORDING TO THE PLAT THEREOF FILED IN DADE COUNTY, FLORIDA, DECEMBER 30, 1901 IN BOOK "B", PAGE 59, IN THE PUBLIC RECORDS OF DADE COUNTY, FLORIDA, AND REFILED IN PALM BEACH COUNTY FLORIDA, ON MARCH 25, 1910, IN BOOK 1, PAGE 11, OF THE PUBLIC RECORDS OF PALM BEACH COUNTY, FLORIDA, SAID LANDS BEING NOW, HOWEVER, IN MARTIN COUNTY, FLORIDA, BY REDIVISION OF COUNTIES. CONTAINS 40.53 ACRES, MORE OR LESS.

LESS THEREFROM THE FOLLOWING DESCRIBED PARCEL:

COMMENCE AT THE INTERSECTION OF THE WESTERLY RIGHT-OF-WAY LINE OF SAID U.S. HIGHWAY NO. 1, AND THE SOUTH LINE OF SAID NORTH 9/15THS OF THE SUBDIVISION OF LOTS 18, 19, AND 20; THENCE SOUTH 66°17'10" WEST 727.96 FEET MEASURED (727.78 DESCRIPTION) ALONG SOUTH LINE OF SAID NORTH 9/15THS OF THE SUBDIVISION OF LOTS 18, 19, AND 20 TO THE POINT OF BEGINNING; THENCE CONTINUE SOUTH 66°17'10" WEST 1575.25 FEET ALONG SAID SOUTH LINE OF NORTH 9/15THS OF SUBDIVISION OF LOTS 18, 19, AND 20; THENCE NORTH 23°47'05" WEST 781.02 FEET TO THE NORTH LINE OF SAID SOUTH 3/15THS OF THE NORTH 9/15THS OF THE SUBDIVISION OF LOTS 18, 19, AND 20; THENCE NORTH 66°21'10" EAST 1498.84 FEET ALONG SAID NORTH LINE OF SOUTH 3/15THS OF THE NORTH 9/15THS OF THE SUBDIVISION OF LOTS 18, 19, AND 20; THENCE SOUTH 29°23'47" EAST 783.19 FEET MEASURED (782.47 DESCRIPTION) TO THE POINT OF BEGINNING. CONTAINS 27.53 ACRES, MORE OR LESS.

SUBJECT PARCEL DESCRIBED HEREON THEREFORE CONTAINS 317,682.62 SQUARE FEET, 7.293 ACRES, MORE OR LESS.

U.S. HIGHWAY NO. 1
(SE FEDERAL HIGHWAY)

AC	ACRE	CHD	CHORD	EOP	EDGE OF PAVEMENT	I & E	INGRESS & EGRESS EASEMENT	N & TT	NAIL & TIN TAB	P	PLAT	PRO	PRORATED	S/D	SUBDIVISION
A/C	AIR CONDITIONER	CONC	CONCRETE	EOW	EDGE OF WATER	INV	INVERT	N & W	NAIL & WASHER	PB	PLATBOOK	R	RADIUS	T	TANGENT
ALUM	ALUMINUM	CBS	CONC. BLOCK STRUCTURE	EM	ELECTRIC METER	IB	IRON BAR	NGVD	NATIONAL GEODETIC VERTICAL DATUM	PCC	POINT OF COMPOUND CURVATURE	RAD	RADIAL	TCE	TEMPORARY CONSTRUCTION EASEMENT
ANC	ANCHOR	CM	CONCRETE MONUMENT	ES	ELECTRIC SERVICE	IP	IRON PIPE	NO ID	NO IDENTIFICATION	PC	POINT OF CURVATURE	RRS	RAILROAD SPIKE	TOB	TOP OF BANK
APPROX	APPROXIMATE	CNR	COULD NOT READ	ELEV	ELEVATION	IB & C	IRON BAR & CAP	NTS	NOT TO SCALE	PI	POINT OF INTERSECTION	RNG	RANGE	TOE	TOE OF SLOPE
AVE	AVENUE	CPP	CONCRETE POWER POLE	ENCL	ENCLOSURE	IP & C	IRON PIPE & CAP	NAD	NORTH AMERICAN DATUM	POB	POINT OF BEGINNING	RLS	REGISTERED LAND SURVEYOR	TWP	TOWNSHIP
BRG	BEARING	COR	CORNER	X 17.00	EXISTING ELEVATION	L	ARC LENGTH	ORB	OFFICIAL RECORD BOOK	POC	POINT OF COMMENCEMENT	RCP	REINFORCED CONCRETE PIPE	TRANS	TRANSFORMER
BLK	BLOCK	COV	COVERED	FT	FEET	LE	LANDSCAPE EASEMENT	O/S	OFFSET	POE	POINT OF ENCROACHMENT	R/W	RIGHT OF WAY	TYP	TYPICAL
BLVD	BOULEVARD	CMP	CORRUGATED METAL PIPE	F	FIELD MEASUREMENT	LB	LICENSED BUSINESS NUMBER	OH	OVERHANG	PRC	POINT OF REVERSE CURVATURE	SS	SANITARY SEWER	UDE	UTILITY & DRAINAGE EASEMENT
BLDG	BUILDING	CVG	CONCRETE VALLEY GUTTER	FNC	FENCE	LP	LIGHT POLE	OHW	OVERHEAD WIRE	PT	POINT OF TANGENCY	SECT	SECTION	UE	UTILITY EASEMENT
BM	BENCHMARK	D	DEED	FFE	FINISHED FLOOR ELEVATION	M & W	MAG NAIL & WASHER	PG	PAGE	PP	POWER POLE	SET I.B.	SET 5/8 IRON BAR & CAP #4049	U/G	UNDERGROUND
CATV	CABLE TELEVISION BOX	D/F	DRAINFIELD	FH	FIRE HYDRANT	MAG	MAG NAIL	PK	PARKER-KALON NAIL	PUE	PRIVATE UTILITY EASEMENT	SET PK	SET PK NAIL & WASHER #4049	WF	WOOD FENCE
C	CALCULATED	DE	DRAINAGE EASEMENT	FPL	FLORIDA POWER & LIGHT	ME	MAINTENANCE EASEMENT	PK & TT	PARKER-KALON NAIL & TIN TAB	PLS	PROFESSIONAL LAND SURVEYOR	SV	SEWER VALVE	WM	WATER METER
CB	CATCH BASIN	~~~~	DRAINAGE FLOW	FND	FOUND	MH	MANHOLE	PK & W	PARKER-KALON NAIL & WASHER	℄	PROPERTY LINE	S/W	SIDEWALK	WV	WATER VALVE
△	CENTRAL ANGLE	ESMT	EASEMENT	GOVT	GOVERNMENT	MHWL	MEAN HIGH WATER LINE	PVMT	PAVEMENT	PROP	PROPOSED	SBT	SOUTHERN BELL TELEPHONE BOX	WPP	WOOD POWER POLE
CLF	CHAINLINK FENCE	EOC	EDGE OF CONCRETE	HSE	HOUSE	NL	NAIL	PRM	PERMANENT REFERENCE MONUMENT	● 17.00	PROPOSED ELEVATION	S/F	SQUARE FEET	ø	DIAMETER

1. *PROPERTY ADDRESS: U.S. HIGHWAY NO. 1*

2. *CERTIFIED TO:*

- *STUART 13 ACRE, LLC*
- *JOHN EDGAR SHERRARD, P.A.*
- *CHICAGO TITLE INSURANCE COMPANY*

NOT VALID WITHOUT THE SIGNATURE AND THE ORIGINAL RAISED SEAL OF A FLORIDA LICENSED SURVEYOR AND MAPPER.

STEPHEN J. BROWN, INC.

STEPHEN J. BROWN, PROFESSIONAL SURVEYOR AND MAPPER
REGISTRATION NO. 4049, STATE OF FLORIDA

NOTES:

Date of field survey: 09/08/2010

1. *Survey of description as furnished by Client.*
2. *Lands shown hereon were not abstracted for easements and/or rights-of-way of record.*
3. *All bearings are referenced to the South line of subject property, platted as S66°17'10"W, all others relative thereto.*
4. *Elevations shown hereon are relative to National Geodetic Vertical Datum of 1929, and are based on bench mark.*
5. *There are no above ground encroachments, unless otherwise shown.*
6. *The National Flood Insurance Program designation as indicated on the F.E.M.A. Map No. 12085C 0164F , dated 10/04/2002 , locates the parcel in Zone X , base flood elevation N/A feet; subject to any scaling and interpolation factors associated with mapping of this accuracy. This data is an interpretation by the surveyor and is provided as a courtesy. The flood zone(s) should be verified by a determination agency.*
7. *Underground foundations & utilities not located unless shown.*

REVISIONS	BY

BOUNDARY SURVEY PREPARED FOR: STUART 13 ACRE, LLC

STEPHEN J. BROWN, INC. LICENSED BUSINESS NUMBER: 6484
SURVEYORS • DESIGNERS • LANDPLANNERS • CONSULTANTS
619 EAST 5TH STREET, STUART, FLORIDA 34994 (772) 288-7176

DRAWN	S.J.B.
CHECKED	S.J.B.
DATE	09/10/2010
SCALE	1" = 60'
JOB NO.	1054-33-01
SHEET	ONE

OF ONE SHEETS

Development Department

City of Stuart

121 SW Flagler Avenue ~ Stuart, FL 34994

Phone: (772) 288-5326
Fax: 288-5388

March 29, 2017

Via: Return Receipt
Mail

Chairperson Doug Smith & Commissioners
MC Board of County Commissioners
2401 SE Monterey Road
Stuart, Florida 34996

Re: Application for voluntary annexation

Dear Chairperson Smith & Commissioners,

Pursuant to Florida Statute Section 171.044 (6),attached please find a notice of proposed annexation which will be published in the Stuart News, once each week for two consecutive weeks, prior to the Stuart City Commission's final consideration of the item on May 22, 2017. A complete copy of the annexation ordinance and Local Planning Agency (LPA) agenda packet will be provided to County Growth Management Director, Nicki VanVonno, by April 14, 2017. If you have any questions regarding this letter, please do not hesitate to contact this office at (772) 288-5368.

Sincerely,

Terry O' Neil
City Development Director

cc: Taryn Kryzda, County Administrator
Nicki VanVonno, County Growth Management Director
Stuart City Commission
Paul Nicoletti, City Manager

Attached: Stuart News Advertisement

CITY OF STUART
NOTICE OF PUBLIC HEARING
ON THE ANNEXATION OF LAND

An ordinance (title shown below) to annex a single parcel (map shown below) will be considered by the Stuart Local Planning Agency (LPA) on Thursday, April 20, 2017 at 5:30 PM and by the Stuart City Commission on Monday, May 8, 2017 and Monday, May 22, 2017 at 5:30 PM. All hearings will take place at the Stuart City Hall Commission Chambers, 121 SW Flagler Avenue in Stuart. A complete legal description by metes and bounds and a complete copy of the ordinance may be obtained from the Office of the City Clerk or by calling (772) 288-5368.

ORDINANCE No. 2352-2017

AN ORDINANCE OF THE CITY OF STUART, FLORIDA, ANNEXING THREE PARCELS OF LAND WEST OF SE FEDERAL HIGHWAY, CONSISTING OF 13.57 ACRES, SAID PARCELS BEING MORE FULLY DESCRIBED IN EXHIBIT "A" ATTACHED HERETO; PROVIDING DIRECTIONS TO THE CITY CLERK; PROVIDING FOR REPEAL OF ALL ORDINANCES IN CONFLICT; PROVIDING FOR SEVERABILITY; AND PROVIDING FOR AN EFFECTIVE DATE, AND FOR OTHER PURPOSES.

LOCATION MAP

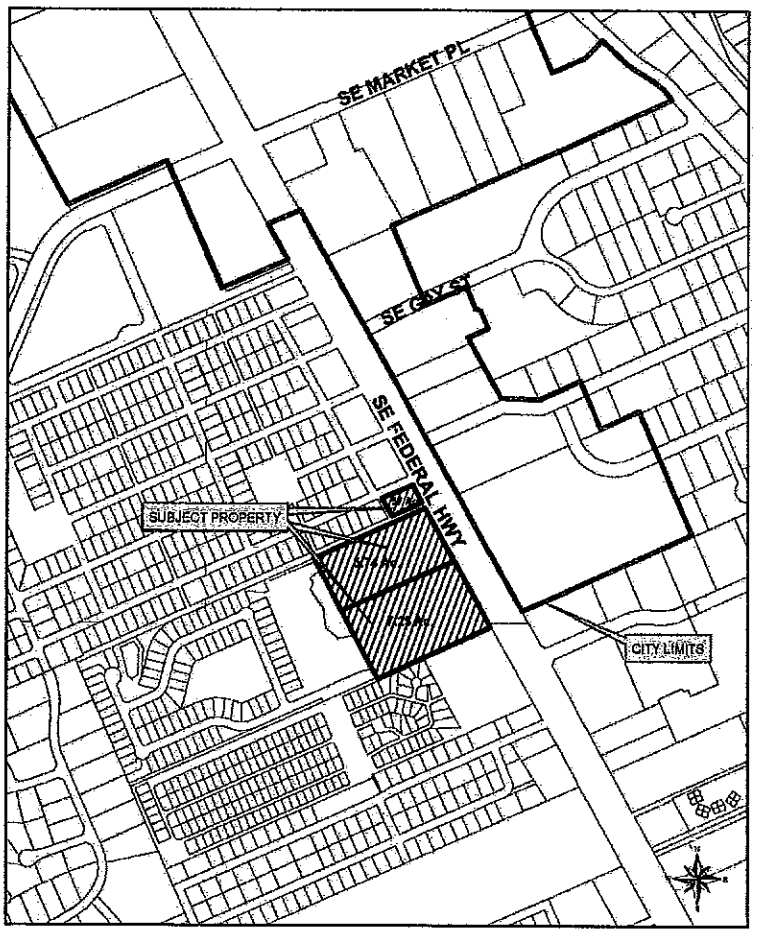

Publish April 15, 2017 & May 8, 2017 & May 15, 2017

City of Stuart
Development Department
121 SW Flagler Avenue
Stuart, FL 34994
Ph. 772-288-5300
Fax 772-288-5388

AFFIDAVIT ATTESTING TO NOTIFICATION

Boyd G. Bradfiled, Jr. being first duly sworn, depose(s) and say(s):

That I am the owner(s) or petitioner(s) of the following described property which constitutes the location for which notification is required:

52-38-41-000-000-01101-0 – Tierra Del Lago, Inc. – 5.7430 Acres
52-38-41-000-000-01102-0 – Stuart 13 Acres – 7.2570 acres
523841005000005103000O – Stuart Harbor Marina and Yacht Club - .5739 Acres

That a photograph showing the placement of the notification sign is made a part of this Affidavit.

SIGNED (PROPERTY OWNER / AUTHORIZED AGENT)

SIGNED (PROPERTY OWNER / AUTHORIZED AGENT)

SWORN TO AND SUBSCRIBED before me this 3rd day of April, 2017.

NOTARY PUBLIC, STATE OF FLORIDA:

Crystal Marie Ward
COMMISSION # FF129126
EXPIRES: JUN 03, 2018
BONDED THRU
1st FLORIDA NOTARY, LLC

My Commission Expires:

NOTICE OF PUBLIC HEARING

PROPOSED ANNEXATION OF THREE PARCELS OF LAND CONSISTING OF 13.57 ACRES (+/-) INTO THE CITY OF STUART

Stuart Local Planning Agency
April 20, 2017 and May 22, 2017 at 5:30 P.M.

STUART CITY HALL 121 SW FLAGLER AVE 772-288-5326 8:30 AM – 4:00 PM
VISIT WWW.CITYOFSTUART.US FOR MORE INFORMATION

NOTICE OF PUBLIC HEARING
PROPOSED ANNEXATION OF THREE PARCELS OF LAND CONSISTING OF 13.57 ACRES (+/-) INTO THE CITY OF STUART
Stuart Local Planning Agency
April 20, 2017 and May 22, 2017 at 5:30 P.M.
hcoast
FOR SALE
ACRES

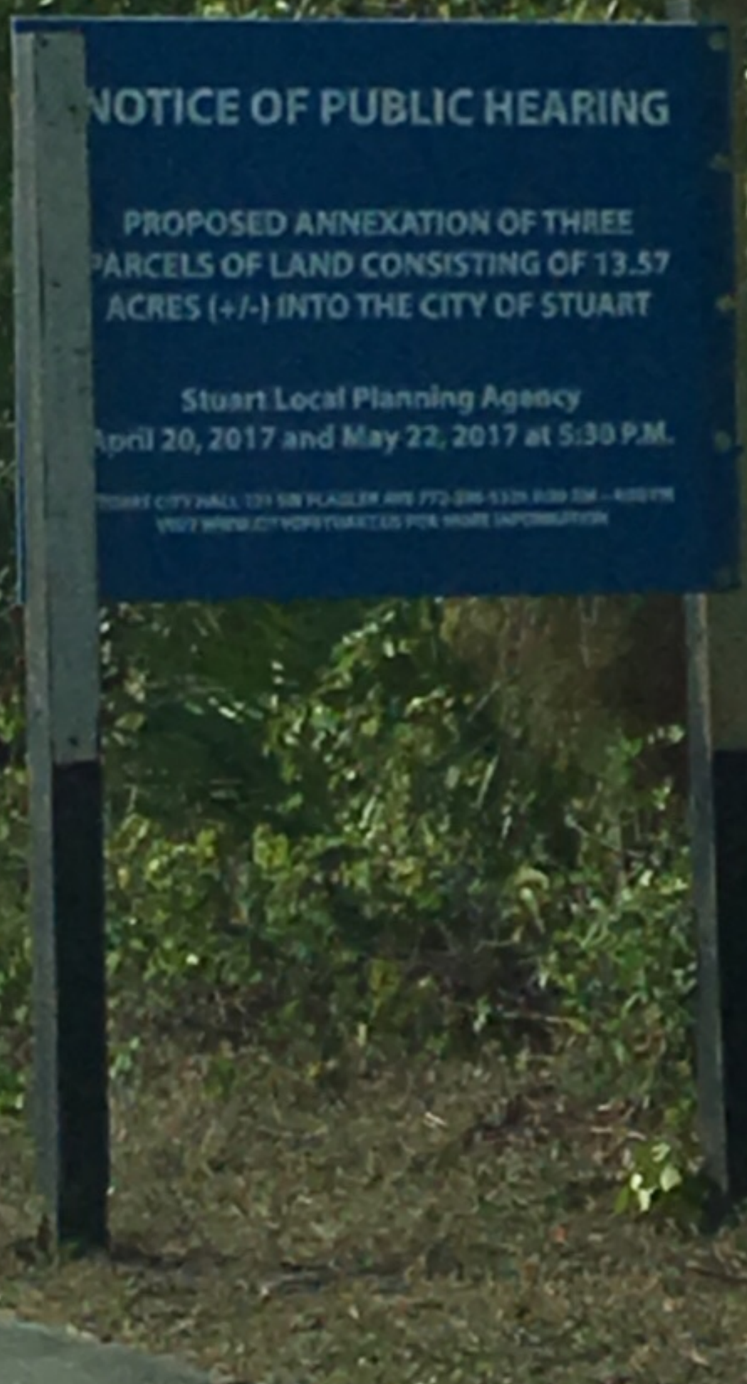
NOTICE OF PUBLIC HEARING
PROPOSED ANNEXATION OF THREE
PARCELS OF LAND CONSISTING OF 13.57
ACRES (+/-) INTO THE CITY OF STUART
Stuart Local Planning Agency
April 20, 2017 and May 22, 2017 at 5:30 P.M.

CITY OF STUART
OFFICE OF THE CITY
ATTORNEY

MEMORANDUM

TO: TERRY O'NEIL, DEVELOPMENT DIRECTOR

SUBJECT: ANNEXATION OF THREE (3) LOTS ON SOUTH FEDERAL HIGHWAY n/k/a STUART 13 ACRES, LLC

CC: PAUL NICOLETTI, CITY

MANAGER DATE: April 13, 2017

I have reviewed an annexation request for the annexation of a 5.743 acre parcel of land located on S.E. Federal Highway bearing parcel control no.: 52-38-41-000-000-01101-0; an annexation request for .5739 acres of land bearing parcel control no.: 52-38-41-005-000-00510-3; and an annexation request for 7.25 acre parcel bearing parcel control no.: 52-38-41-000-000-01102-0 as depicted in the location map attached as Exhibit "A."

Voluntary annexations are governed by the standards of Section 171.044 Florida Statutes. The basic requirement is stated as follows:

> "(1) The owner or owners of real property in an unincorporated area of a county which is contiguous to a municipality and reasonably compact may petition the governing body of said municipality that said property be annexed to the municipality."

Because these three (3) parcels are being submitted as one annexation the review will be based upon all three parcels being annexed contemporaneously and treated as one contiguous parcel.

The state statute contains four (4) general requirements. First, a petition for voluntary annexation must be unanimously signed by all property owners in the area to be annexed. Second, the property proposed to be annexed must be contiguous and reasonably compact. Third, the

proposed annexation cannot produce an enclave. Finally, county charters which provide for an exclusive method of municipal annexation override the Florida Statute. Martin County is not a Charter county and therefore, the fourth criteria does not apply to an annexation in the City of Stuart, Florida.

1. **Signed by all property owners in the geographic area being annexed**. My review of the application indicates that Richard A. Wright, as President of Tierra DeLago, as well as Richard A. Wright, as President of the Stuart Harbor Marina and Yacht Club have executed the applications for annexation and signed affidavit claiming to be the sole owner of same. Based upon the affidavit signed by the applicants, all owners have executed the application.

2. **Contiguous to the Municipality:** Pursuant to Section 171.044(1), F.S., "the owner or owners of real property in an unincorporated area of a county which is contiguous to a municipality and reasonably compact may petition the governing body of said municipality that said property be annexed to the municipality." Property is deemed to be "Contiguous" under Section 171.031 (11), F.S., where a substantial part of a boundary of the territory sought to be annexed by a municipality is coterminous (sharing a common boundary) with a part of the boundary of the municipality. "Contiguous" has also been defined as "touching or adjoining in a reasonably substantial … sense." See City of Sanford v. Seminole County, 538 So. 2d 113 (Fla. 5th DCA 1989); May v. Lee County, 483 So. 2d 481 (Fla. 2d DCA 1986). The Sanford Court found that Section 171.031(11) F.S. only requires "that a substantial part of a boundary" touch municipal property as opposed to the entire perimeter of the property.

   Section 171.031(11) provides that:

   > Separation of the territory sought to be annexed from the annexing municipality by a publicly owned right-of-way for a highway, road, railroad, canal or utility or a body of water, watercourse of other minor geographical division of a similar nature, running parallel with and between the territory sought to be annexed and the annexing municipality, shall not prevent annexation under this act, provided the presence of such division does not, as a practical matter, present the territory sought to be annexed and the annexing municipality from becoming a unified whole with respect to municipal services or prevent inhabitants from fully associating and trading with each other socially and economically.

In the current application, a review of the location map indicates that a substantial part of the boundary is coterminous with the City of Stuart. The entire frontage of the property of all three properties abuts and is bordered by the City of Stuart. Therefore, the property meets condition two and deemed is contiguous to the City of Stuart.

3. Reasonably Compact

"Compactness is defined under subsection (12) of 171.031, F.S., to mean a concentration of a piece of property in a single area. The requirement for compactness precludes any action which would create enclaves, pockets, or ginger areas in serpentine patterns. The purpose of the compact and contiguous requirement is to assure creation of geographically unified and compact municipalities, City of Sunrise v. Broward County, 473 So. 2d 1387 (Fla. 4th DCA 1985).

A review of the map and the application determines that this property is reasonably compact and meets Florida Statute 171.031(12). Given the configuration of the City, as well as the property requesting annexation, the annexation will not create pockets of unincorporated areas or serpentine finger areas.

No Enclaves

Subsection 5 of 171.044, F.S. Provides that "[l] and shall not be annexed through voluntary annexation when such annexation results in the creation of enclaves". The term "enclave" is defined under Section 171.031(13), F.S., as "any unincorporated improved or developed area that is bounded on all sides by a single municipality or any unincorporated improved or developed area that is enclosed within and bounded by a single municipality and a natural or manmade obstacle that allows the passage of vehicular traffic to that unincorporated area only through the municipality." A review of the map, Exhibit "A", clearly shows that annexation of the parcel would not create an area bounded on all sides by a single municipality, and there is no natural or manmade obstacle to vehicular traffic in close proximity to either parcel. Therefore, no enclaves are created.

A review of the map clearly shows that an annexation of this parcel would not create an area bound on all sides by a single municipality, and there is no natural or manmade obstacle to vehicular traffic in close proximity to either parcel. Therefore, no enclaves are created.

Conclusion

Based upon the foregoing facts and analysis it is my opinion that the voluntary annexation of this parcel into the municipal boundaries of the City of Stuart comply with Florida Statute §171.044. This opinion is prepared solely at the request of and for the use of, the City of Stuart, and no other person or entity may rely on it for any purpose without the express written permission of the City of Stuart.

Exhibit 'A'

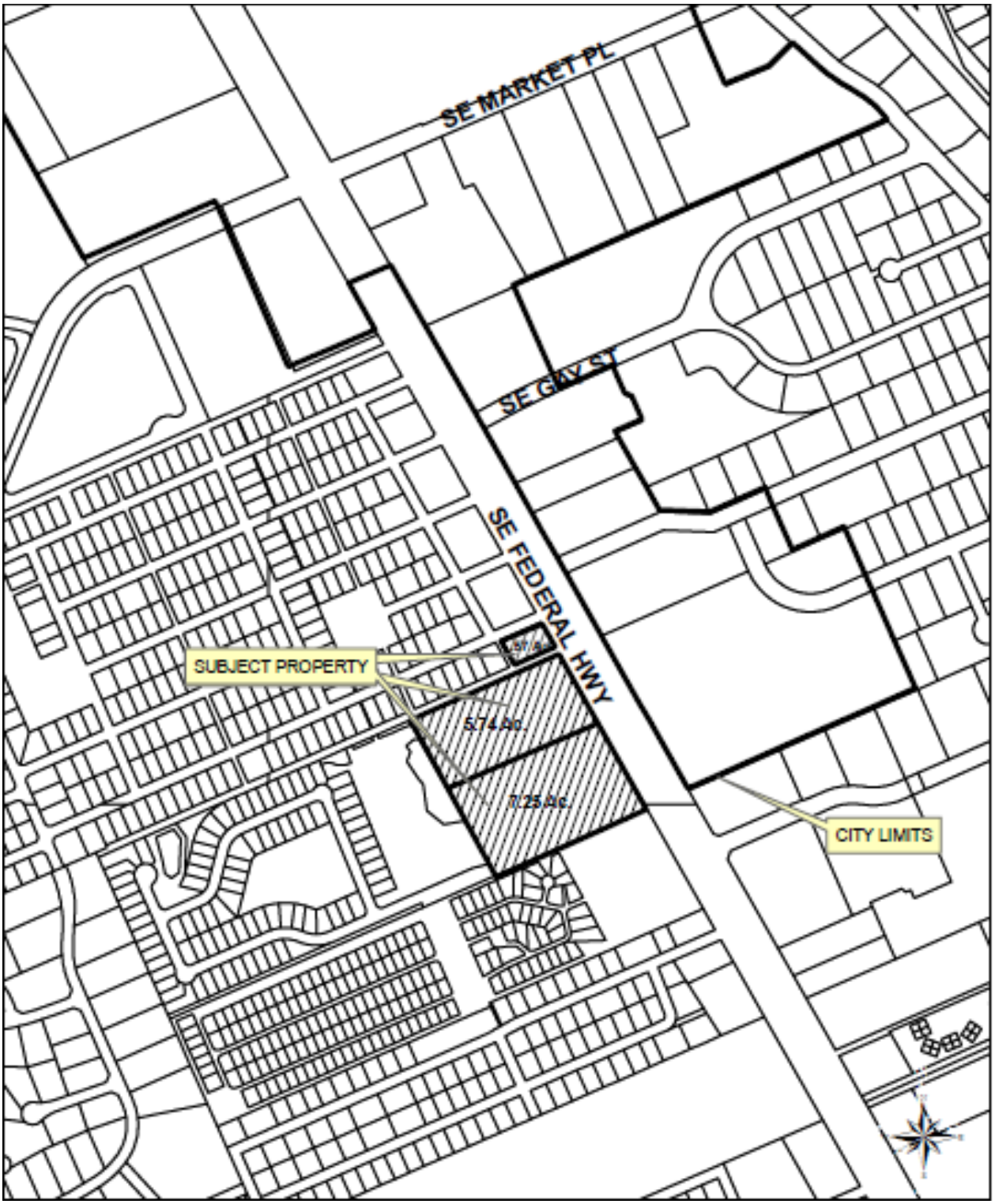
SE MARKET PL
SE GAY ST
SE FEDERAL HWY
SUBJECT PROPERTY
5.74 Ac
7.25 Ac
CITY LIMITS

CITY OF STUART, FLORIDA
AGENDA ITEM REQUEST
CITY COMMISSION

Meeting Date: 5/22/2017 **Prepared by:** Tom Reetz

Title of Item:

(Quasi Judicial) ORDINANCE No. 2353-2017; AN ORDINANCE OF THE CITY COMMISSION OF THE CITY OF STUART, FLORIDA APPROVING A REZONING FROM "URBAN GENERAL" IN THE CITY'S URBAN DISTRICT TO "CPUD" - COMMERCIAL PLANNED UNIT DEVELOPMENT ON THE CITY'S OFFICIAL ZONING MAP FOR A 10.4 ACRE PARCEL LOCATED AT 20 NE DIXIE HIGHWAY, SAID LAND BEING MORE FULLY DESCRIBED IN EXHIBIT "A" ATTACHED, ESTABLISHING THE TREASURE COAST COMMUNITY CHURCH COMMERCIAL PLANNED UNIT DEVELOPMENT CONSISTING OF A NEW 32,572 SQUARE FOOT WORSHIP CENTER BUILDING AND A 17,000 SQUARE FOOT TWO STORY OFFICE BUILDING DESIGNATED FOR NON-PROFIT ORGANIZATIONS; APPROVING A MASTER DEVELOPMENT PLAN; PROVIDING FOR DEVELOPMENT CONDITIONS; PROVIDING A TIMETABLE FOR DEVELOPMENT; PROVIDING FOR ACCEPTANCE BY THE APPLICANT; DECLARING THE PLAN TO BE CONSISTENT WITH THE CITY'S COMPREHENSIVE PLAN; REPEALING ALL ORDINANCES IN CONFLICT HEREWITH; PROVIDING FOR SEVERABILITY; PROVIDING DIRECTIONS TO THE CITY CLERK; PROVIDING FOR AN EFFECTIVE DATE, AND FOR OTHER PURPOSES. (RC)(QJ)

Summary Explanation/Background Information on Agenda Request:

In 1998 the Community Redevelopment Area incorporated the subject property assigning a land use designation of Downtown Redevelopment and Urban General zoning classification into what is now the 'Urban Code District'. Later, in 2006 a major site plan was applied for by the HAI Group and was approved for a 61-unit multifamily residential subdivision, however, the project was never developed.

In 2012, Treasures Coast Community Church (TC3) purchased the racquetball club at 20 NE Dixie Highway and applied for and were approved via a Major Urban Code Exception for substantial improvements and allowing the existing building to function as a church in the urban district. Later, the church purchased the adjacent 8.36 acres (previously approved for the 61-unit multifamily project) and combined the two parcels by unity of title.

Currently, the church has made application to rezone the 10.4 acre property to CPUD - Commercial Planned Unit Development to allow for development of a new 32,572 sq. ft. worship center building and a 17,000 square foot two story professional office building designated for use by nonprofit organizations. The Planned Unit Development master site plan depicts a courtyard/plaza connecting the existing 2 story building which will continue to be used for classrooms and offices by the church with the new worship center. The project proposes a new driveway connection to NW Dixie Highway to the west with 6 dedicated parking spaces and a pedestrian connection to the new Haney Creek boardwalk preserve area just west of the project. The site plan includes amenities such as stabilized grass parking, native landscaping and four foot wide mulch trails that meander through the sites upland preserve as well as improving the quality of the sites two existing wetlands. These amenities will vastly improve the quality and sustainability of the site and compliment the City's Haney Creek improvement project.

On April 20, 2017, the LPA unanimously recommended approval for the applicant's request to re-zone the property to CPUD and adopt a master development plan.

Unanimous approval of this item on first reading was granted by the City Commission on May 8, 2017.

Funding Source:
N/A

Recommended Action:
Recommend approval of Ordinance No. 2353-2017 on second reading.

ATTACHMENTS:

	Description	Upload Date	Type
🗋	Ordinance No. 2353-2017	5/17/2017	Ordinance add to Y drive
🗋	CC Staff Report	5/2/2017	Staff Report
🗋	Pamp Plan	5/2/2017	Backup Material
🗋	LPA Minutes	5/2/2017	Backup Material

Return to:
City Attorney's Office
City of Stuart
121 SW Flagler Street
Stuart, FL 34994

BEFORE THE CITY COMMISSION
CITY OF STUART, FLORIDA

ORDINANCE NUMBER 2353-2017

AN ORDINANCE OF THE CITY COMMISSION OF THE CITY OF STUART, FLORIDA APPROVING A REZONING FROM "URBAN GENERAL" IN THE CITY'S URBAN DISTRICT TO "CPUD" - COMMERCIAL PLANNED UNIT DEVELOPMENT ON THE CITY'S OFFICIAL ZONING MAP FOR A 10.4 ACRE PARCEL LOCATED AT 20 NE DIXIE HIGHWAY, SAID LAND BEING MORE FULLY DESCRIBED IN EXHIBIT "A" ATTACHED, ESTABLISHING THE TREASURE COAST COMMUNITY CHURCH COMMERCIAL PLANNED UNIT DEVELOPMENT CONSISTING OF A NEW 32,572 SQUARE FOOT WORSHIP CENTER BUILDING AND A 17,000 SQUARE FOOT TWO STORY OFFICE BUILDING DESIGNATED FOR NON-PROFIT ORGANIZATIONS; APPROVING A MASTER DEVELOPMENT PLAN; PROVIDING FOR DEVELOPMENT CONDITIONS; PROVIDING A TIMETABLE FOR DEVELOPMENT; PROVIDING FOR ACCEPTANCE BY THE APPLICANT; DECLARING THE PLAN TO BE CONSISTENT WITH THE CITY'S COMPREHENSIVE PLAN; REPEALING ALL ORDINANCES IN CONFLICT HEREWITH; PROVIDING FOR SEVERABILITY; PROVIDING DIRECTIONS TO THE CITY CLERK; PROVIDING FOR AN EFFECTIVE DATE, AND FOR OTHER PURPOSES.

* * * * *

WHEREAS, the City Commission held a properly noticed hearing at a regularly scheduled City Commission meeting to consider the application by Pastor Gordon Mularski, for 10.4 acres of land located at 20 NE Dixie Highway; and

WHEREAS, the City of Stuart has determined the need to change the Land Development zoning district for said lands; and

WHEREAS, the City Commission, has considered the Petitioner's voluntary request for a zoning designation, and has also considered the recommendation of the City staff.

WHEREAS, the Applicant has committed to the City that its development will comply with all development codes, plans, standards and conditions approved by the City Commission; and that it will bind its successors in title to any such commitments made upon approval of the CPUD; and

WHEREAS, at the hearing the applicant showed by substantial competent evidence that the application is consistent with the Stuart Comprehensive Plan, and the Land Development Code of the City, and with the procedural requirements of law; and

WHEREAS, the CPUD development will be in harmony with surrounding properties and their anticipated development;

WHEREAS, the foregoing recitals are true and adopted as findings of fact and conclusions of law.

WHEREAS, the property is legally described in **"Exhibit A"** of this ordinance. A map depicting the property is attached hereto as **Exhibit "B"** and made a part hereof by reference; and development conditions including a timetable for construction is attached hereto as **Exhibit "C";** and

NOW THEREFORE, BE IT ORDAINED BY THE CITY COMMISSION OF THE CITY OF STUART, FLORIDA THAT:

SECTION 1: The following new documents are on file as public records of the City, at the office of the City Clerk in City Hall, and attached hereto as **Exhibit "D"**, hereinafter the

"Development Documents", shall be deemed a part of the development conditions, and shall supplement any earlier approvals:

1. **The Planned Unit Development Site Plan, Sheet SP-1, prepared by HJA Design Studio, dated 11.30.16, last revised on 3.28.17.**
2. **The Existing Tree/Removal Plan, Sheet L-1, prepared by HJA Design Studio, dated 11.30.16, last revised on 3.28.17.**
3. **The Landscape Plan and Landscape Specifications, Sheets L-2 & L-3, prepared by HJA Design Studio, dated 11.30.16, last revised on 3.28.17.**
4. **The Boundary/Topographic Survey, Sheet 1 of 2, prepared by the Velcon Group, dated 12.14.16.**
5. **The Tree Survey, Sheet 4 of 4, prepared by the Velcon Group, dated 12.14.16.**
6. **The Concept Plan (Phase1), Drawing No. A.201A, prepared by Specialized Planning and Architecture for Church Environments, LLC, dated March 13, 2017.**
7. **The Concept Elevations (Phase1), Drawing No. A.301A, prepared by Specialized Planning and Architecture for Church Environments, LLC, dated March 13, 2017.**
8. **The Wetland Maintenance and Monitoring Plan/Preserve Area Management Plan, prepared by EW Consultants, dated March, 2017.**

SECTION 2: The Land Development (Zoning) District designation on the City of Stuart Official Zoning Map shall be established as "CPUD" Commercial Planned Unit Development.

SECTION 3: Except as otherwise provided herein, no development permits, site permits, or building permits shall be issued by the City except in compliance with the City's Land Development Code.

SECTION 4: All ordinances or parts of ordinances in conflict with this ordinance or any part thereof is hereby repealed to the extent of such conflict. If any provision of this ordinance

conflicts with any contractual provision between the City and the developer of the site, this ordinance shall prevail.

SECTION 5: If any provision of this ordinance or the application thereof to any person or circumstance is held invalid, the invalidity shall not affect other provisions or applications which can be given effect without the invalid provision or application, and to this end the provisions of this ordinance are declared severable.

SECTION 7: In addition to any other action for failure to comply with any section of this ordinance, the City Development Director may obtain a hearing before the City Commission, and shall thereupon give at least five (5) days written notice of the time, date and location of the hearing, along with specific notice of the alleged breach. At the hearing before the City Commission the developer may appear, and may contest the allegation of breach or explain the reason or reasons for the breach.

In the event a material breach is found to have occurred, the City Commission may initiate the process to amend or repeal this ordinance. In the event a material breach is found to have occurred, the City Commission may also direct the City Development Director to initiate the process to rezone the property or any portion of the property. Any breach of any provision or condition of this ordinance by the owner shall be considered a zoning violation subject to any remedies provided therefore in this ordinance, as well as any other remedies provided by law.

In the event a material breach of this ordinance, and acceptance and agreement, by the developer is found to have occurred, the City Commission may impose an administrative penalty. Upon a finding by the City Commission that any material condition of PUD approval

Ordinance 2353-17 has been breached; the City Commission may impose a penalty of up to $1,000.00 for each violation, and each repeat violation that occurs, along with all reasonable costs,

including attorney's fees incurred by the City. In the event the violation found is a continuing violation from day to day, each day the violation is found to continue may be deemed a separate violation.

SECTION 8: This ordinance and agreement shall be effective upon the last of the following to occur: adoption by the City Commission, and proper execution and acceptance by the Owner.

SECTION 9: The complete execution and recording of this ordinance by the City Clerk shall occur no later than 45 days from the date of adoption, failing which this ordinance shall be void.

PASSED on First Reading this 8th day of May, 2017.

Commissioner _____ offered the foregoing ordinance and moved its adoption. The motion was seconded by Commissioner _____ and upon being put to a roll call vote, the vote was as follows:

	YES	NO	ABSENT
THOMAS F. CAMPENNI, MAYOR			
EULA R. CLARK,VICE MAYOR			
TROY MCDONALD, COMMISSIONER			
KELLI GLASS LEIGHTON, COMMISSIONER			
JEFFREY A. KRAUSKOPF, COMMISSIONER			

ADOPTED on second and final reading this 22nd day of May, 2017.

ATTEST:_____ _____

CHERYL WHITE
CITY CLERK

THOMAS F. CAMPENNI
MAYOR

APPROVED AS TO FORM AND CORRECTNESS:

_____
MICHAEL MORTELL
CITY ATTORNEY

ACCEPTANCE AND AGREEMENT

BY SIGNING THIS ACCEPTANCE AND AGREEMENT, THE UNDERSIGNED HEREBY ACCEPTS AND AGREES TO ALL OF THE TERMS AND CONDITIONS CONTAINED IN A COMMERCIAL PLANNED UNIT DEVELOPMENT AND IN ALL EXHIBITS, ATTACHMENTS AND DEVELOPMENT DOCUMENTS, INTENDING TO BE BOUND THEREBY, AND THAT SUCH ACCEPTANCE AND AGREEMENT IS DONE FREELY, KNOWINGLY, AND WITHOUT ANY RESERVATION, AND FOR THE PURPOSES EXPRESSED WITHIN THE ABOVE ORDINANCE. IF IT IS LATER DISCOVERED THAT THE UNDERSIGNED, OR ITS SUCCESSORS OR ASSIGNS HAVE FAILED IN ANY MATERIAL WAY TO DEVELOP THIS COMMERCIAL PLANNED UNIT DEVELOPMENT ACCORDING TO THIS ORDINANCE, ITS CONDITIONS, AND THE DEVELOPMENT PLANS AND DOCUMENTS, THE UNDERSIGNED UNDERSTANDS AND AGREES THAT THIS ORDINANCE MAY BE AMENDED OR REPEALED BY THE CITY COMMISSION, AND THAT OTHER ACTIONS MAY BE TAKEN AGAINST THE UNDERSIGNED BY THE CITY, INCLUDING BUT NOT LIMITED TO CODE ENFORCEMENT ACTIONS, PERMIT AND LICENSING REVOCATIONS, AND ALL APPLICABLE CIVIL AND CRIMINAL ACTIONS.

IN WITNESS WHEREOF THE UNDERSIGNED HAS EXECUTED THIS ACCEPTANCE AND AGREEMENT:

WITNESSES:

_____

Print Name: _____

_____

Print Name: _____

Gordon Mularski, Pastor

By:_____

OWNERS ACKNOWLEDGMENT

The above Ordinance, Acceptance and Agreement was acknowledged before me this _____day of _____, 2017, by Gordon Mularski, pastor of Treasure Coast Community church, Inc.

_____

Notary Public, State of Florida
My Commission Expires:

Notary Seal

Personally Known _____ OR Produced Identification _____
Type of Identification Produced _____

CITY'S ACKNOWLEDGMENT

The above Ordinance, Acceptance and Agreement was acknowledged before me this _____day of _____, 2017, by THOMAS F. CAMPENNI, MAYOR, and Cheryl White, City Clerk, respectively, of the City of Stuart, Florida, a Florida municipal corporation.

_____
Notary Public, State of Florida
My Commission Expires:

Notary Seal

Personally Known _____ OR Produced Identification _____
Type of Identification Produced _____

EXHIBIT A – LEGAL DESCRIPTION

LEGAL DESCRIPTION:
THE EAST HALF OF THE NORTH HALF OF GOVERNMENT LOT 1, IN SECTION 32, TOWNSHIP 37 SOUTH, RANGE 41 EAST, LYING SOUTH OF THE SOUTH RIGHT OF WAY LINE OF STATE ROAD A1A (NOW STATE ROAD 707), AND LYING NORTH OF THE NORTH RIGHT OF WAY LINE OF THE FLORIDA EAST COAST RAILWAY. LESS THE EAST 73.99 FEET THEREOF, SAID PROPERTY LYING AND BEING IN MARTIN COUNTY, FLORIDA.
LESS AND EXCEPT A CERTAIN PARCEL PURSUANT TO AN ORDER OF MARTIN COUNTY CIRCUIT COURT IN CASE NO. 09-858CA, DATED OCTOBER 15, 2009, SAID PARCEL BEING DESCRIBED AS FOLLOWS:
A PARCEL OF LAND LYING IN SECTION 32, TOWNSHIP 37 SOUTH, RANGE 41 EAST, MARTIN COUNTY, FLORIDA, SAID PARCEL BEING MORE PARTICULARLY DESCRIBED AS FOLLOWS:
COMMENCE AT THE NORTHEAST CORNER OF SAID SECTION 32; THENCE SOUTH 00°21'34" EAST, ALONG THE EAST LINE OF SAID SECTION 32, A DISTANCE OF 15.00 FEET TO A POINT ON THE SOUTH RIGHT OF WAY LINE OF N.E. DIXIE HIGHWAY; THENCE NORTH 89°53'21" WEST ALONG SAID SOUTHERLY RIGHT OF WAY LINE, A DISTANCE OF 230.58 FEET TO THE POINT OF BEGINNING;
THENCE CONTINUE ALONG SAID SOUTHERLY RIGHT OF WAY LINE BY THE FOLLOWING COURSES AND DISTANCES: NORTH 89°53'21" WEST, A DISTANCE OF 92.35 FEET TO THE BEGINNING OF A CURVE CONCAVE TO THE SOUTHEAST, HAVING A RADIUS OF 271.82 FEET; THENCE WESTERLY AND SOUTHWESTERLY ALONG THE ARC OF SAID CURVE THROUGH A CENTRAL ANGLE OF 38°23'36", A DISTANCE OF 182.14 FEET; THENCE SOUTH 38°16'57" EAST AND NON TANGENT TO THE LAST DESCRIBED CURVE, A DISTANCE OF 15.00 FEET TO A POINT ON A NON TANGENT CURVE CONCAVE TO THE SOUTHEAST THE CHORD OF WHICH BEARS SOUTH 42°35'23" WEST, HAVING A RADIUS OF 256.84 FEET; THENCE SOUTHWESTERLY ALONG THE ARC OF SAID CURVE THROUGH A CENTRAL ANGLE OF 18°15'20", A DISTANCE OF 81.83 FEET; THENCE SOUTH 33°27'41" WEST, A DISTANCE OF 72.11 FEET; THENCE DEPARTING SAID SOUTHERLY RIGHT OF WAY LINE SOUTH 53°53'25" EAST, A DISTANCE OF 6.07 FEET; THENCE NORTH 36°06'35" EAST, A DISTANCE OF 82.38 FEET; THENCE NORTH 40°19'15" EAST, A DISTANCE OF 53.85 FEET; THENCE NORTH 52°43'41" EAST, A DISTANCE OF 44.23 FEET; THENCE NORTH 69°31"30" EAST, A DISTANCE OF 121.72 FEET; THENCE SOUTH 89°49"25" EAST, A DISTANCE OF 109.36 FEET; THENCE NORTH 00°00'00" EAST, A DISTANCE OF 17.13 FEET TO THE POINT OF BEGINNING.

ALSO LESS AND EXCEPT THE ADDITIONAL PARCEL OF LAND CONVEYED TO THE STATE OF FLORIDA DEPARTMENT OF TRANSPORTATION BY DEED RECORDED IN OFFICIAL RECORDS BOOK 2258, PAGE 997, PUBLIC RECORDS OF MARTIN COUNTY, FLORIDA, MORE PARTICULARLY DESCRIBED AS FOLLOWS:

A STRIP OF LAND FOR RIGHT OF WAY PURPOSES BEING A PORTION OF THE FOLLOWING DESCRIBED PARCEL:
THE EAST HALF OF THE NORTH HALF OF GOVERNMENT LOT 1, IN SECTION 32, TOWNSHIP 37 SOUTH, RANGE 41 EAST, MARTIN COUNTY, FLORIDA, LYING SOUTH OF THE SOUTH RIGHT OF WAY OF STATE ROAD A1A (NOW STATE ROAD 707), AND LYING NORTH OF THE RIGHT OF WAY LINE OF THE FLORIDA EAST COAST RAILWAY, LESS THE EAST 73.99 FEET THEREOF. SAID RIGHT OF WAY PARCEL BEING MORE PARTICULARLY DESCRIBED AS FOLLOWS:
COMMENCE AT THE NORTHEAST CORNER OF SAID SECTION 32, THENCE RUN NORTH 89°53'15" WEST ALONG THE NORTH LINE OF SECTION 32, A DISTANCE OF 74.01 FEET; THENCE DEPARTING SAID NORTH LINE RUN SOUTH 01°02'21" EAST, A DISTANCE OF 15.75 FEET TO THE SOUTH RIGHT OF WAY LINE OF STATE ROAD 707 AND THE POINT OF BEGINNING; THENCE CONTINUE SOUTH 01°02'21" EAST, A DISTANCE OF 21.96 FEET; THENCE SOUTH 89°13'39" WEST, A DISTANCE OF 173.25 FEET TO A POINT OF CURVATURE OF A CURVE CONCAVE TO THE NORTHEAST, HAVING A RADIUS OF 26.00 FEET, THENCE RUN NORTHWESTERLY 16.07 FEET ALONG THE ARC OF SAID CURVE, THROUGH A CENTRAL ANGLE OF 35°25'15" TO THE END OF SAID CURVE; THENCE NORTH 89°26'24" EAST, A DISTANCE OF 32.45 FEET; THENCE NORTH 00°44'11" WEST, A DISTANCE OF 17.13 FEET TO THE SOUTH RIGHT OF WAY LINE OF STATE ROAD 707; THENCE NORTH 89+°127" 46' EAST ALONG SAID SOUTH RIGHT OF WAY LINE, A DISTANCE OF 155.65 FEET TO THE POINT OF BEGINNING.
ALSO INCLUDING:
THE WEST 101.01 FEET OF GOVERNMENT LOT 4, SECTION 33, TOWNSHIP 37 SOUTH, RANGE 41 EAST, MARTIN COUNTY, FLORIDA, LYING NORTH OF THE NORTH LINE OF THE FLORIDA EAST COAST RAILROAD RIGHT OF WAY AND SOUTH OF THE NORTH LINE OF SAID SECTION 33,
TOGETHER WITH:
THE EAST 73.99 FEET OF GOVERNMENT LOT 1, SECTION 32, TOWNSHIP 37 SOUTH, RANGE 41 EAST, MARTIN COUNTY, FLORIDA, AS MEASURED ALONG THE NORTH LINE OF SAID SECTION 32, AND LYING NORTH OF THE NORTH LINE OF THE FLORIDA EAST COAST RAILROAD RIGHT OF WAY.

EXHIBIT B – LOCATION MAP

EXHIBIT C – DEVELOPMENT CONDITIONS

ORDINANCE No. 2353-2017 "Treasure Coast Community Church"

Approved Plans and Documents

1. The Treasure Coast Community Church project and use thereof shall comply with the following drawings:

    a. **The Planned Unit Development Site Plan, Sheet SP-1, prepared by HJA Design Studio, dated 11.30.16, last revised on 3.28.17.**
    b. **The Existing Tree/Removal Plan, Sheet L-1, prepared by HJA Design Studio, dated 11.30.16, last revised on 3.28.17.**
    c. **The Landscape Plan and Landscape Specifications, Sheets L-2 & L-3, prepared by HJA Design Studio, dated 11.30.16, last revised on 3.28.17.**
    d. **The Boundary/Topographic Survey, Sheet 1 of 2, prepared by the Velcon Group, dated 12.14.16.**
    e. **The Tree Survey, Sheet 2 of 2, prepared by the Velcon Group, dated 12.14.16.**
    f. **The Concept Plan (Phase1), Drawing No. A.201A, prepared by Specialized Planning and Architecture for Church Environments, LLC, dated March 13, 2017.**
    g. **The Concept Elevations (Phase1), Drawing No. A.301A, prepared by Specialized Planning and Architecture for Church Environments, LLC, dated March 13, 2017.**
    h. **The Wetland Maintenance and Monitoring Plan/Preserve Area Management Plan, prepared by EW Consultants, dated March 2017.**

2. Any modifications to the Master CPUD Site Plan that exceeds 10% of the approved building footprint, building setbacks, gross square footage, building location, parking size, location and number of parking, drainage areas, and location of landscaping may be approved by the

City's Development Director, provided however, the Development Director may refer the matter to the City Commission for approval via a public hearing.

3. Development of the Subject Property as a CPUD shall include an impervious area of not more than forty-seven percent (47%) for the CPUD. The maximum building height within the CPUD shall be 35 feet. Height shall be measured from the lowest permissible finished first floor elevation to the surface of a flat roof and to the eave of a pitched roof. The peak of a pitched roof may not exceed 15 feet above the maximum building height.

Landscaping

4. All landscape areas shall be provided with an irrigation system of sufficient capacity to maintain the landscaping in a healthy growing condition.

5. The City's landscape inspector shall have the opportunity to inspect all trees and/or landscape material with the landscape architect prior to installation. The developer shall bear the pass-thru fee for landscape consulting fees not to exceed $1,500.00.

6. A Preserve Area Management Plan, (P.A.M.P.) attached as part of Exhibit D, shall be used to maintain, monitor and manage two wetlands, upland buffer and eradication of all exotic and nuisance vegetation in perpetuity.

Required Open Space and Native Preserve Area

7. Open Space. Not less than 30% of the CPUD shall be open space as defined in the City Land Development Regulations. Required open space may include native vegetation areas and landscape buffers between the CPUD and adjacent property; however, other required landscaping shall not count towards the open space requirement.

8. Excluding wetlands defined by the South Florida Water Management District, not less than 20% of the total development site shall remain as undeveloped and recreated native vegetation area. The required native vegetation area may include open space areas and the landscape buffer between the site and adjacent property; however, other required

landscaping shall not count towards the native vegetation requirement. The location of the native vegetation shall comply with the project's landscape plans, Sht. L-2 by HJA Design Studio and The Wetland Maintenance and Monitoring Plan prepared for TC3 by EW consultants, dated March, 2017, attached as Exhibit D to this document. The owner/ developer shall adhere to the provisions of the Wetland Maintenance and Monitoring Plan and permanent maintenance will be the responsibility of Treasure Coast Community Church.

9. The City may elect at any time to assign a future land use designation of "Conservation" to the PUD's preserve areas without objection by the Owners. Said preserve areas shall be identified in the Preserve Area Maintenance Plan (PAMP), as more particularly set forth in Condition #6)

Tree Mitigation

10. 148 inches of Hardwood (non-slash pine) and 763 inches of softwoods (Sabal Palms & Bald Cypress) shall be provided on site per Landscape Plan by HJA Studio attached as part of Exhibit D.

11. A detailed relocation and protection plan for trees is required as part of Site construction permit submittal.

Prior to Issuance of Site Permits

12. Applicant shall provide a digital boundary survey and civil plan prior to the issuance of a site permit.

13. Civil Plans shall be reviewed and approved by all applicable City departments prior to the issuance of a site permit.

14. All development activities shall comply with the City's Concurrency Management System prior to the issuance of building permits.

15. An updated Environmental assessment determining the limits of the wetlands is required to be submitted at Site construction permitting.

16. A wetland mitigation plan will be required prior to site plan approval.

17. The finished floor elevations designated on the construction plans shall be submitted for site and building permits.

Development and Construction

18. The developer shall install trees at the city's ROW along the arc of State Road 707 per Sheet L-2 of the landscape drawings by HJA studios attached as part of Exhibit D. The owner/ developer (church) shall provide the maintenance for the landscaping in the R.O.W. including irrigation.

19. The property is within the Community Redevelopment Area, and accordingly, prior to the issuance of any construction permits for vertical construction on a Parcel, the Owners of such Parcel shall either: a) contribute an amount equal to or greater than one and one-half percent of the value of vertical construction costs for such Parcel into the public art trust fund; or b) provide work of art on the property, the value of which shall not be less than one percent of the vertical construction costs for such Parcel and shall be submitted and approved by the City's Community Redevelopment Board for conformity with the public art standards as required in Sec. 3.01.08 of the City's Land Development Code. If the work of art has not been approved by the CRB at the time of application for a building permit, the applicant shall provide a performance security bond or other surety acceptable to the city, in the amount of one and one-half percent of the value of the vertical construction which shall be posted until the work of art is approved by the CRB. The cost estimate of bid for work of art shall be provided by the artist or representative and accepted by the city. The surety may be extended no more than 12 months from the original surety expiration date. This surety shall be cancelled, or returned when the work of art has been approved by the CRB.

20. All final site plan construction drawings shall be reviewed and approved by all applicable City departments.

21. Prior to issuance of development permit being issued, applicant is to meet all design criteria as set forth in Kimley Horn's review letter dated January 27, 2017 pertaining to site and environmental comments.

22. The applicant shall adhere to the Wetland, Maintenance and Monitoring Plan/Preserve Area management Plan prepared by EW consultants including provisions of which shall be implemented prior to construction to prevent encroachment and negative effects upon required preserve areas.

23. Construction activity shall be limited from 7:00 am to 6:00 pm Monday – Saturday. Hours and days may be extended by written permission from the City Manager upon good cause shown by the developer.

24. In the event of any conflict in the provisions of Exhibit 'C' Development Conditions and attached exhibits, Exhibit 'C' shall prevail.

25. Prior to certificate of occupancy being issued for phase one of the worship center, the applicant shall provide an engineer's written confirmation attesting that the CPUD's storm water system is in place and functioning in compliance with all approved plans and specifications.

26. Erosion and dust control measures to be implemented during construction shall be provided on the civil plans and submitted during site permit review. Water trucks shall be provided by the applicant as necessary during construction in order to reduce dust generated on-site.

27. Sidewalk connection with the proposed sidewalk by others on the west side of Dixie Highway shall be part of the proposed site plan.

28. All new pole lighting, bollards, fencing and similar structures shall be of a decorative character. Poles for lighting in the parking areas shall not exceed 25 ft. in height and shall not exceed 15 ft. in height in pedestrian areas. All new lighting shall have a consistent theme throughout the development.

29. Construction of all permanent buildings shall be of concrete and/or masonry.

30. Building addresses and/or numbers shall be in plain view and shown on each building plan submitted at the time of building permit application in accordance with the City Code and shall be consistent with the sign plan.

31. Any sidewalk damaged during construction shall be repaired or replaced prior to the issuance of a Certificate of Occupancy for the first building.

32. Temporary or freestanding storage units are prohibited on the property once construction is complete.

Signage

33. The development's monument sign shall comply with the location 'Proposed Monument Sign' as shown on SP-1 drawing as attached in Exhibit "D" and shall comply with the City's sign code in the Stuart land Development Code.

34. Timetable for development shall be as follows: next page.

Development Timetable

Phase 1: 21,324 Sq. Ft. Worship Center Building and all Site Amenities.

Site and building plans, deemed sufficient for permit review under city codes and standards, submitted by:	January 1, 2018
* Certificate of Occupancy by:	January 1, 2021

Phase 2: 11,248 Sq. Ft. Worship Center (Addition to Phase 1)

Site and building plans, deemed sufficient for permit review under city codes and standards, submitted by:	January 1, 2019
* Certificate of Occupancy by:	January 1, 2021

Phase 3: 17,000 Sq. Ft. 2 Story Office Building

Site and building plans, deemed sufficient for permit review under city codes and standards, submitted by:	June 1, 2021
*Certificate of Occupancy by:	June 1, 2023

* For the purpose of this agreement, Certificate of Occupancy shall mean minimum physical improvements necessary to allow for occupancy under the Florida Building Code.

Ordinance 2353-2017 - TC3 Rezoning to CPUD and Final Site Plan Approval

Location Map

Site Data

Total Site Area	(453,024 SF) 10.4 Ac
Existing Church Site	2.22 Ac
Undeveloped Site	8.36 Ac
Existing Zoning	Downtown Redevelopment
Proposed Zoning	Urban General CPUD
Existing Use	House of Worship

Building Data

Total Gross Floor Area	Existing Building 11,132 Sf
	Proposed Worship 21,324 Sf
	Proposed Office Building 17,000 Sf
	Total: 60,704 SF
Total Building Coverage	Existing Building 11,132 SF
	Proposed Worship 32,572 SF
	Proposed Office Building 8,500 SF
	Total: 82,204 SF
Maximum Building Height	30'
Building Setback	Required
Front	25'
Side	7'
Rear	10'

Open Space

Total Site Area	113,756 sf	2.61 Ac	25%
Open Space Required	136,507 sf	3.13 Ac	30%
Perimeter Landscape Buffers	12,988 sf	0.30 Ac	3%
Wetlands	45,727 sf	1.05 Ac	10%
Upland Preserve / Wetland Buffer	80,108 sf	1.84 Ac	17%

Impervious Area

Total Building Coverage	82,204 sf	1.20 Ac	11%
Vehicular Use Area	117,721 sf	2.70 Ac	25%
Sidewalks / Paved Areas / Patio	20,195 sf	0.05 Ac	8%
Pervious Paving / Grass Parking 50%	37,627 sf	0.86 Ac	8%
	21,785 sf	0.50 Ac	5%
Total	279,532 sf	6.41 Ac	53%
Pervious Paving / Grass Parking 50%	42,223 sf	0.96 Ac	10%
Interior Landscape Areas	Total	240,080 sf	5.50 Ac

Pervious Area

Wetlands	45,727 sf	1.05 Ac	10%
Upland Preserve / Wetland Buffer	80,108 sf	1.84 Ac	17%
Perimeter Landscape Buffers	12,988 sf	0.30 Ac	3%
Dry Retention (Pervious Areas)	37,627 sf	0.86 Ac	8%
Pervious Paving / Grass Parking 50%	21,785 sf	0.50 Ac	5%
Interior Landscape Areas	42,223 sf	0.96 Ac	10%
Total	240,080 sf	5.50 Ac	53%

Wetland / Upland Preservation Data

Total Ex. Upland / Wetland Area	51,151 sf	1.17 Ac	
Wetland 1	22,063 sf		
Wetland 2	29,088 sf		
Total Wetland Impacts	5,404 sf	0.12 Ac	
Proposed Wetland Preservation	45,727 sf	1.05 Ac	
Required Upland Preservation (7,51 x 25%*)	79,715 sf	1.83 Ac	
*(17-Vol.2 Preservation Ordinance, Land Development Code)			
Proposed Upland Preservation	80,108 sf	1.84 Ac.	

Parking Data

Total Parking Spaces Required:	310 Spaces
Total Parking Spaces Provided:	331 Spaces (Includes 12 Handicap Spaces + 6 Hanicap Spaces + 1 Van Accessible Space)
Proposed Worship Center (807 seats / 4)	227 Spaces
Proposed 2 Story Office Building (1 per 300 sf)	57 Spaces
Required Spaces (17,000 sf / 300)	
Existing Building (Offices / Classrooms) (1 per 300 sf)	26 Spaces
Required Spaces (11,132 sf / 300)	

Notes

1. Applicant will allow for transit drop-off and pick-up access.

Legend

- Sod/Island / Pervious Green Parking Spaces
- ★ Handy Preserve Trail Head Parking

HJA DESIGN STUDIO
50 E. Ocean Blvd., Suite 101
Stuart, Florida 34994
T 772.678.7200
F 772.678.7201
www.hjadesignstudio.com
LA 0000905

Treasure Coast Community Church

City of Stuart — Florida

Planned Unit Development Site Plan

Job No.	6505
Drawn By	EE
Checked By	MH
Approved By	MH
Submittal Dates	1-30-16
	3-30-17
Revision Dates	5-22-17

SP-1

Copyright

Ordinance 2353-2017 - TC3 Rezoning to CPUD and Final Site Plan Approval

Ordinance 2353-2017 - TC3 Rezoning to CPUD and Final Site Plan Approval

Landscape Data

Total Site Area	(453,024 Sf) 10.4 Ac.
Landscape Area Required (20%)	2.1 Ac.
Landscape Area Provided (48%)	5 Ac.

Perimeter Landscaping Adjacent to Streets
10' Min. Landscape Buffer- 1 Tree per 30 LF and perimeter hedge required. Not less than 25% of strip shall be groundcover.

NE Dixie Hwy:	
Trees Required: (498 LF / 30)	= 17 Trees
Trees Provided:	= 17 Trees (651 Trees + 14 Palms)

Perimeter Landscaping Adjacent to Private Property:
5' Min. Landscape Buffer- 1 Tree per 30 LF and perimeter hedge required. Not less than 25% of strip shall be groundcover.

Along East Property Line:	
Trees Required: (495 LF / 30)	= 17 Trees
Trees Provided:	= 17 Trees (at value trees)
Along South Property Line:	
Trees Required: (410 LF / 30)	= 14 Trees
Trees Provided:	= 14 Trees (4 Real Palms + 10 Trees)

Interior Landscaping around Perimeter of Building:
A 5' min. landscape strip shall be provided along all sides of the building which abut a parking area. The strip shall contain 1 Tree per 30 LF and a Hedge.

Phase 1 Worship Center:	
Trees Required: (617 LF / 30)	= 21 Trees
Trees Provided:	= 21 Trees
Proposed Future 2 Story Building:	
Trees Required: (160 LF / 30)	= 6 Trees
Trees Provided:	= 6 Trees

Interior Landscaped Islands:
Each interior island shall contain a min. of 1 shade tree and a combination of shrubs, ground cover, grass and mulch. Hedge material used must be maintained at a max. height of 24"

Trees Required:	= 29 Trees
Trees Provided:	= 29 Trees

Interior Terminal Landscaped Islands:
Each interior island shall contain a min. of 1 shade tree and a combination of shrubs, ground cover, grass and mulch. Hedge material used must be maintained at a max. height of 24"

Trees Required:	= 36 Trees
Trees Provided:	= 36 Trees (5 Slash Pines + 31 Tree)

Tree Mitigation Data

Protected Specimen Trees (Excluding Slash Pines)

Total Inches to be Removed	58 Inches
Total Required Inches for Mitigation (2.5 x 58 Inches)	145 Inches
Total Provided Inches for Mitigation	146.5 Inches
Provided Hardwood	= 81 Inches
18 Oak Trees (4 5" Cal.)	= 67.5 Inches
15 Gumbo Limbo Trees (4.5" Cal.)	

Protected Specimen Slash Pines

Total Inches to be Removed	507 Inches
Total Required Inches for Mitigation (1.5 x 507 Inches)	760.5 Inches
Total Provided Inches for Mitigation	763 Inches
Provided Softwood	= 75 Inches
30 Slash Pines (30 x 2.5)	
Salsal Palms	= 174 Inches
39 @ 18' Ct. (6 Inches)	
33 @ 18' Ct. (6 Inches)	= 264 Inches
18 @ 27' Ct. (10 Inches)	= 180 Inches
28 Bald Cypress (28 x 2.5)	= 70 Inches

Scale: 1" = 40'
0' 20' 40' 80' 120'
North

DESIGN STUDIO
50 E. Ocean Blvd., Suite 101
Stuart, Florida 34994
T 772.678.7200
F 772.678.7201
www.hjadesignstudio.com
LA 0000935

Treasure Coast Community Church

City of Stuart — Florida

Landscape Plan

Copyright
These drawings, plans, specifications and designs are the property of HJA Design Studio, Inc. and are not to be used in whole or in part for any other project without the written permission of HJA Design Studio, Inc. Unauthorized use of these drawings, plans, specifications and designs is prohibited by law and will be subject to legal action.

Job No	16003
Drawn By	ES
Checked By	MH
Approved By	MH
Submittal Dates	4-28-17 9-5-17
Revision Dates	9-28-17

L-2

Landscape Notes

1. THE LANDSCAPE CONTRACTOR SHALL BE RESPONSIBLE FOR ADHERING TO ALL THE REQUIREMENTS STATED UNDER DIVISION 1 - GENERAL REQUIREMENTS AND CONDITIONS AS WELL AS THE SPECIFIC CRITERIA OUTLINED HEREIN AND ON THE LANDSCAPE DRAWINGS INCLUDING ADDENDA AS MAY BE ISSUED BY THE OWNER.

2. THE SCOPE OF WORK FOR THE LANDSCAPE CONTRACTOR FOR THIS PROJECT SHALL INCLUDE THE PROVISION OF ALL LABOR, MATERIALS AND EQUIPMENT REQUIRED TO COMPLETE ALL TASKS ASSOCIATED WITH THE LANDSCAPE AND IRRIGATION INSTALLATION AS SHOWN ON THE DRAWINGS OR NOTED HEREIN. THE LANDSCAPE CONTRACTOR IS RESPONSIBLE FOR COORDINATING WITH THE GENERAL CONTRACTOR REASONABLE ACCESS TO POWER AND POTABLE WATER SOURCES AS REQUIRED.

3. THE LANDSCAPE CONTRACTOR SHALL BE RESPONSIBLE FOR INSURING ALL WORK (INCLUDING DELIVERY, STORAGE AND DISPOSAL OF THEIR MATERIALS) IS PERFORMED IN COMPLIANCE WITH APPLICABLE JURISDICTIONAL CODES. THE CONTRACTOR IS RESPONSIBLE FOR OBTAINING ALL PERMITS ASSOCIATED WITH THE WORK.

4. THE LANDSCAPE CONTRACTOR SHALL ASSIGN A QUALIFIED PROJECT MANAGER AND FIELD SUPERVISOR TO WORK DIRECTLY WITH THE LANDSCAPE ARCHITECT AND SUPERVISE THE WORK AT ALL TIMES THROUGH FINAL OWNER ACCEPTANCE. IT IS THE CONTRACTOR'S RESPONSIBILITY TO ENSURE THAT PROJECT MANAGER HAS A COMPLETE, CURRENT SET OF DOCUMENTS ON-SITE AT ALL TIMES.

5. THE LANDSCAPE CONTRACTOR SHALL BE RESPONSIBLE FOR FAMILIARIZING THEMSELVES WITH EXISTING SITE CONDITIONS AND NOTIFYING THE OWNER IN WRITING OF ANY CONCERNS PRIOR TO COMMENCEMENT OF WORK. THIS EVALUATION SHOULD INCLUDE, BUT IS NOT LIMITED TO, VERIFICATION OF SURFACE AND SUBSURFACE UTILITIES, GRADES, DIMENSIONS AND SOIL CONDITIONS.

6. THE LANDSCAPE CONTRACTOR SHALL BE RESPONSIBLE FOR FAMILIARIZING THEMSELVES WITH PROJECT PLANS AND SCOPES OF WORK RELATED TO ASSOCIATED TRADES TO BE PERFORMED BY OTHERS IN ORDER TO IDENTIFY KEY COORDINATION ITEMS INCLUDING, BUT NOT LIMITED TO, SITE ACCESS, MATERIAL STORAGE, SCHEDULING AND SEQUENCING OF WORK. THE LANDSCAPE CONTRACTOR IS RESPONSIBLE FOR COORDINATING ALL SITE ISSUES WITH THE GENERAL CONTRACTOR.

7. THE LANDSCAPE CONTRACTOR SHALL BE RESPONSIBLE FOR THE PROTECTION OF ALL ADJACENT WORK, MATERIALS AND EQUIPMENT FROM DAMAGE DUE TO THEIR ACTIVITIES. THE LANDSCAPE CONTRACTOR WILL BE SOLELY RESPONSIBLE FOR ANY DAMAGE OR INJURY TO PERSON OR PROPERTY THAT MAY OCCUR AS A RESULT OF THE EXECUTION OF THEIR WORK.

8. THE LANDSCAPE CONTRACTOR SHALL BE RESPONSIBLE FOR MAINTAINING THE AREA, MATERIALS AND EQUIPMENT WITHIN THE LIMITS OF WORK IN A SAFE, NEAT AND ORDERLY MANNER. EXCESS MATERIALS AND DEBRIS ARE TO BE REMOVED FROM THE WORK AREA NO LESS THAN WEEKLY OR AS DIRECTED BY THE GENERAL CONTRACTOR.

9. THE LANDSCAPE CONTRACTOR MUST TAKE PRECAUTIONS TO PROTECT ALL EXISTING SITE ROADS PARKING LOTS, CURBS AND UTILITIES FROM DAMAGE. THIS APPLIES NOT ONLY TO THE AREA WITHIN THE LIMITS OF WORK BUT ALSO ALONG ANY LOCAL ACCESS ROADS.

10. THE LANDSCAPE CONTRACTOR SHALL PROVIDE ALL NECESSARY SAFETY MEASURES DURING CONSTRUCTION OPERATIONS TO PROTECT THE PUBLIC ACCORDING TO ALL APPLICABLE CODES AND RECOGNIZE LOCAL PRACTICES.

11. THE LANDSCAPE CONTRACTOR SHALL COORDINATE WITH GENERAL CONTRACTOR TO ENSURE THAT TEMPORARY EROSION AND SEDIMENTATION CONTROL MEASURES (SILT FENCE, ORANGE GEO FENCE AND/OR OTHER MEASURES) ARE INSTALLED PRIOR TO BEGINNING EXCAVATION.

12. THE LANDSCAPE CONTRACTOR SHALL BE RESPONSIBLE FOR THE MAINTENANCE OF ALL PLANT MATERIALS AND THE PLANTING AREAS UNTIL FINAL ACCEPTANCE BY THE OWNER.

13. THE LANDSCAPE CONTRACTOR IS RESPONSIBLE FOR THE AGRONOMIC EVALUATION OF SOIL CHARACTERISTICS. EVALUATION MUST INCLUDE CHEMICAL ANALYSIS BY A QUALIFIED AGRICULTURAL SOILS TESTING LABORATORY (CERTIFIED IN THE STATE OF FLORIDA). SOILS SAMPLE SHOULD BE TAKEN IMMEDIATELY FOLLOWING COMPLETION OF ROUGH GRADING ACTIVITIES AND SHOULD BE COLLECTED AT A RATE ON ONE SAMPLE FOR EACH 5,000 SQUARE FEET OF IMPACTED AREA, OR A TOTAL OF SIX, WHICHEVER IS GREATER. AT A MINIMUM THE CHEMICAL ANALYSIS OF THE SOIL SHOULD CONSIDER THE FOLLOWING:

A. PERCENTAGE OF ORGANIC MATTER
B. SALINITY
C. PH
D. LIME CONTENT
E. MINERAL NUTRIENTS INCLUDING CONCENTRATIONS OF NITROGEN, PHOSPHOROUS, POTASSIUM, CALCIUM, MAGNESIUM, IRON, ZINC, MANGANESE, COPPER, SULFUR AND MOLYBDENUM.
F. POTENTIAL HAZARDS OR IMPEDIMENTS FOR PLANT GROWTH INCLUDING SALINITY, SODIUM CHLORIDE, BORON, IMPAIRED SOIL STRUCTURE OR DRAINAGE.
F. SAND FRACTION ANALYSIS AS A PERCENTAGE PASSING THROUGH 1", 1/4", AND NO. 200 SIEVES.
H. PERCOLATION RATE IN INCHES PER HOUR.

THE ANALYSIS SHOULD ALSO INCLUDE SPECIFIC RECOMMENDATIONS TO THE OWNER FOR ANY AMENDMENTS AND BACKFILL MIXES FOR OPTIMAL PLANT GROWTH TO BE MADE TO THE SOILS PRIOR TO PLANTING. THE CONTRACTOR SHOULD INCLUDE THE COST FOR SOIL AMENDMENTS. THE CONTRACTOR IS TO PROVIDE THE OWNER WITH COPIES OF ALL SOIL TESTING RESULTS. SUBMITTAL DOCUMENTATION MUST ALSO CONTAIN A GRAPHIC SITE PLAN DEPICTING LOCATIONS FROM WHICH EACH SAMPLE WAS DRAWN.

14. THE LANDSCAPE CONTRACTORS BASE BID FOR SOIL PREPARATION IS TO INCLUDE THE FOLLOWING WITH THE UNDERSTANDING THAT MIX DESIGN MAY NEED TO BE ADJUSTED BASED ON OUTCOME OF AGRONOMIC TESTING.

A. TREES: 100% SITE SOIL WITH 5LB. TRIPLE SUPER PHOSPHATE PER CU. YD.
B. SHRUBS: 100% SITE SOIL WITH OSMOCOTE CONTROLLER RELEASE FERTILIZER (14-14-14) PER MANUFACTURER'S RECOMMENDATION.
C. THE SOILS TEST RESULTS TAKE PRECEDENCE OVER THE ITEMS NOTED IN A AND B ABOVE.

15. SHOULD OWNER AND LANDSCAPE CONTRACTOR AGREE WITH THE RECOMMENDATION OF THE TESTING AGENCY TO FURTHER AMEND THE SOILS THE CONTRACTOR'S CONTRACT WILL BE ADJUSTED ACCORDINGLY. THE CONTRACTOR SHALL BE REQUIRED TO SUBMIT SAMPLES OF AMENDED SOILS TO BE RE-TESTED TO CONFIRM COMPLIANCE WITH RECOMMENDATIONS FOLLOWING THE SAME PROCEDURES AS THE ORIGINAL TESTS.

16. THE LANDSCAPE CONTRACTOR IS RESPONSIBLE FOR CONFIRMING THE QUANTITIES OF EACH PLANT MATERIAL REQUIRED TO ADEQUATELY COVER THE AREA SHOWN ON THE LANDSCAPE PLANS AT THE PRESCRIBED SPACING AND NOTIFYING THE OWNER IMMEDIATELY OF ANY PERCEIVED DISCREPANCIES FOR RESOLUTION. THE PLANT SPACING CONTROLS BED LAYOUT, NOT THE PLAN QUANTITY FOR THAT PARTICULAR BED.

FINE GRADING NOTES

1. FINISHED GRADE IN PLANTING AREAS SHALL BE HELD 2" BELOW THE FINISHED ELEVATIONS SHOWN FOR ALL ADJACENT HARDSCAPE SURFACES.

2. ALL FILL REQUIRED SHALL BE CLEAN, WELL DRAINING SOIL. FILL SHALL BE CLEAN AND FREE OF ALL MATERIAL HARMFUL TO PLANT GROWTH AND DELETERIOUS MATERIAL SUCH AS ROCKS (LARGER THAN 2" DIA.), COMPACTED CLAY, ROADBED OR SURFACING MATERIAL, MUCK, ROOTS AND BRANCHES, ETC.

3. THE LANDSCAPE CONTRACTOR IS TO ENSURE THAT THEIR WORK DOES NOT ADVERSELY IMPACT ESTABLISHED OR PROJECTED DRAINAGE PATTERNS.

INSTALLATION NOTES

[illegible]

SOIL NOTES

[illegible]

ACCEPTANCE NOTES

[illegible]

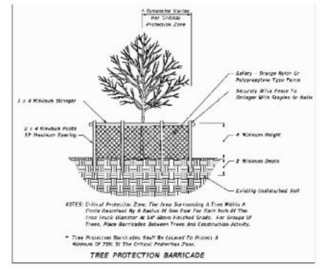

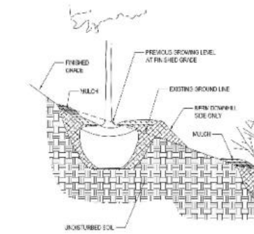

PLANTING ON SLOPE

PLANT SCHEDULE

TREES	CODE	QTY	COMMON NAME / BOTANICAL NAME	SIZE	NATIVE
	AR	3	Red Maple / Acer rubrum	15 gal	
	BS	15	Gumbo Limbo / Bursera simaruba * Tree Mitigation	4.0" DBH	Yes
	CE	17	Green Buttonwood / Conocarpus erectus	2½" Cal, 12' Ht x 6' Spr, Std, 5' ct	Yes
	ED	24	Japanese Blueberry Tree / Elaeocarpus decipiens TM	2.5" Cal, 12' Ht. Min x 5-6' Spr, Std, 4-5' ct	No
	PD2	30	Slash Pine / Pinus elliottii 'Densa' * Tree Mitigation	2.5" DBH	
	PD	5	Slash Pine / Pinus elliottii 'Densa'	3.5" Cal, 12' Ht Min x 5-6' Spr, Std, 4-5' ct	Yes
	QV2	18	Southern Live Oak / Quercus virginiana * Tree Mitigation	4.0" DBH	Yes
	QV	45	Cathedral Live Oak / Quercus virginiana 'Cathedral'	2.5" Cal, 12' Ht Min x 6' Spr, Std, 5-6' ct	Yes
	TD	28	Bald Cypress / Taxodium distichum * Tree Mitigation	2.5" DBH	Yes
PALM TREES	CODE	QTY	COMMON NAME / BOTANICAL NAME	SIZE	NATIVE
	PR2	2	Pigmy Date Palm Multi-Trunk / Phoenix roebelenii	8-11' OA, 4' ct, Double	
	PE2	4	Alexander Palm / Ptychosperma elegans	15-16' OA, Full Head, Double Specimen	
	PE3	6	Alexander Palm / Ptychosperma elegans	15-16' OA, Single Specimen	
	SS	58	Cabbage Palmetto / Sabal palmetto	10' - 16' CT, Stagger Heights	Yes
	SS3	80	Cabbage Palmetto / Sabal palmetto * Tree Mitigation	29 @ 16' ct, 33 @ 18' ct, 18 @ 20' ct	Yes
	WB	15	Foxtail Palm / Wodyetia bifurcata	9-11' GW, 18-20' OA, Single Matched Specimen	No

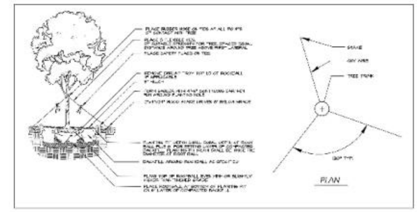

TREE PLANTING DETAIL

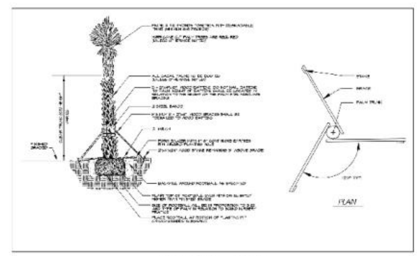

PALM PLANTING DETAIL

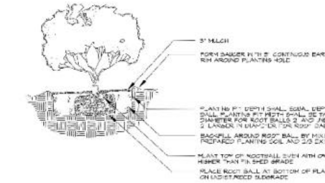

SHRUB/GROUNDCOVER PLANTING DETAIL

PLANT SCHEDULE

HEDGE	QTY	COMMON NAME / BOTANICAL NAME	SIZE	DETAILS	NATIVE	SPACING
CR	481	Red Tip Cocoplum / Chrysobalanus icaco 'Red Tip'	3 gal	Fu	Yes	30" o.c.
CS2	44	Small-Leaf Clusia / Clusia guttifera	3 gal	Fu	Yes	36" o.c.
CU	104	Sea Grape / Coccoloba uvifera	3 gal	Fu	Yes	48" o.c.
VS	166	Sandankwa Viburnum / Viburnum suspensum	3 gal	Fu		30" o.c.
SHRUBS / GROUND COVERS	QTY	COMMON NAME / BOTANICAL NAME	SIZE	DETAILS	NATIVE	SPACING
AM	110	Foxtail Fern / Asparagus meyeri	3 gal	* Full pot	No	24" o.c.
DV	72	Variegated Flax Lily / Dianella tasmanica 'Variegata'	3 gal	Fu	No	24" o.c.
DI	91	White African Iris / Dietes iridioides	1 gal	* Full pot		24" o.c.
FG	618	Green Island Ficus / Ficus microcarpa 'Green Island'	3 gal	Fu	Yes	30" o.c.
ID	1,059	Dwarf Schillings Holly / Ilex vomitoria 'Schillings Dwarf'	3 gal	Fu		24" o.c.
MC	240	Pink Muhly / Muhlenbergia capillaris	1 gal	Fu	Yes	36" o.c.
NF	37	Fishtail Fern / Nephrolepis falcata 'Furcans'	3 gal	Fu		36" o.c.
SB	100	Sand Cord Grass / Spartina bakeri	1 gal	Fu	Yes	36" o.c.
TF	48	Fakahatchee Grass / Tripsacum dactyloides	1 gal	Fu	Yes	48" o.c.
ZP	485	Coontie / Zamia pumila	3 gal	Fu		24" o.c.

HJA DESIGN STUDIO

50 E. Ocean Blvd., Suite 101
Stuart, Florida 34994
T 772.678.7200
F 772.678.7201
www.hjadesignstudio.com
LA 0000905

Treasure Coast Community Church

City of Stuart — Florida

Landscape Specifications

Job No.	6008
Drawn By	ES
Checked By	MH
Approved By	MH
Submittal Dates	11-30-16 3-30-17
Revision Dates	5-28-17

L-3

Ordinance 2353-2017 - TC3 Rezoning to CPUD and Final Site Plan Approval

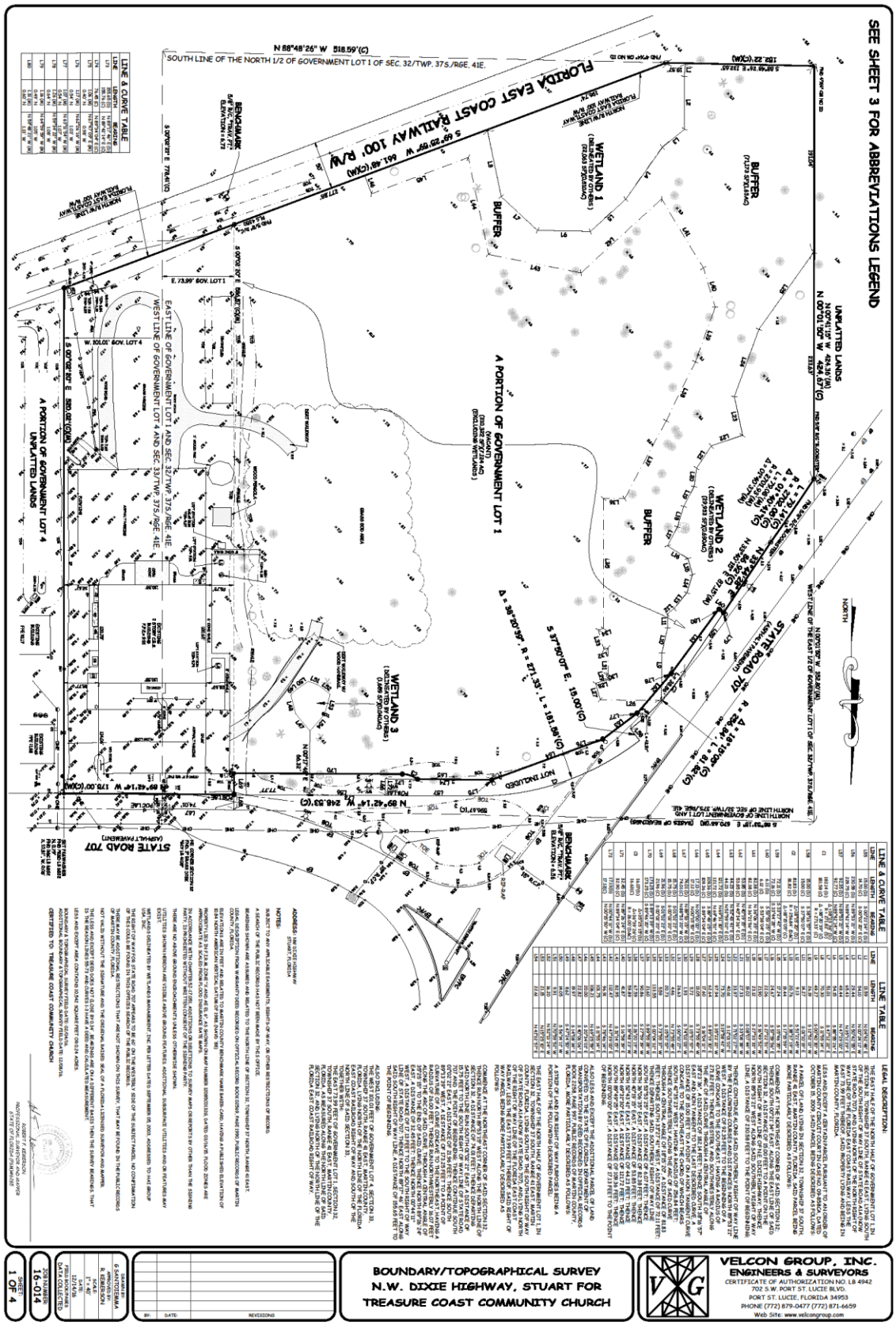

Ordinance 2353-2017 - TC3 Rezoning to CPUD and Final Site Plan Approval

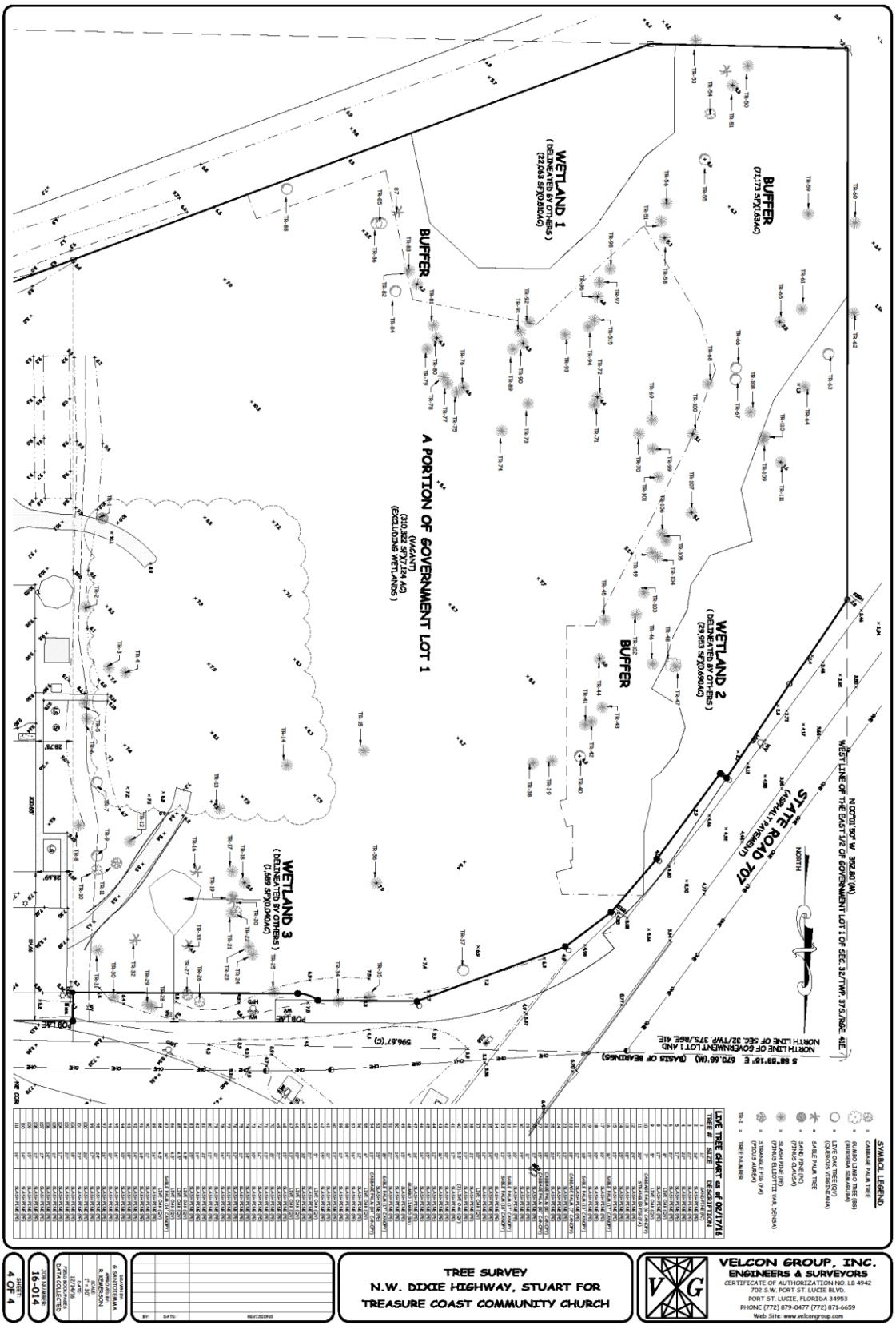

TREE SURVEY
N.W. DIXIE HIGHWAY, STUART FOR
TREASURE COAST COMMUNITY CHURCH

VELCON GROUP, INC.
ENGINEERS & SURVEYORS
CERTIFICATE OF AUTHORIZATION NO. LB 4942
702 S.W. PORT ST. LUCIE BLVD.
PORT ST. LUCIE, FLORIDA 34953
PHONE (772) 879-0477 (772) 871-6459
Web Site: www.velcongroup.com

BY	DATE	REVISIONS

DRAWN BY: G. SANTOSIMMA
CHECKED BY: R. KEMPSON
P.O.B.:
P.O.C.:
DATE:
FIELD WORK COMPLETED:
DATA COLLECTED:

JOB NUMBER: 16-014

SHEET 4 OF 4

Ordinance 2353-2017 - TC3 Rezoning to CPUD and Final Site Plan Approval

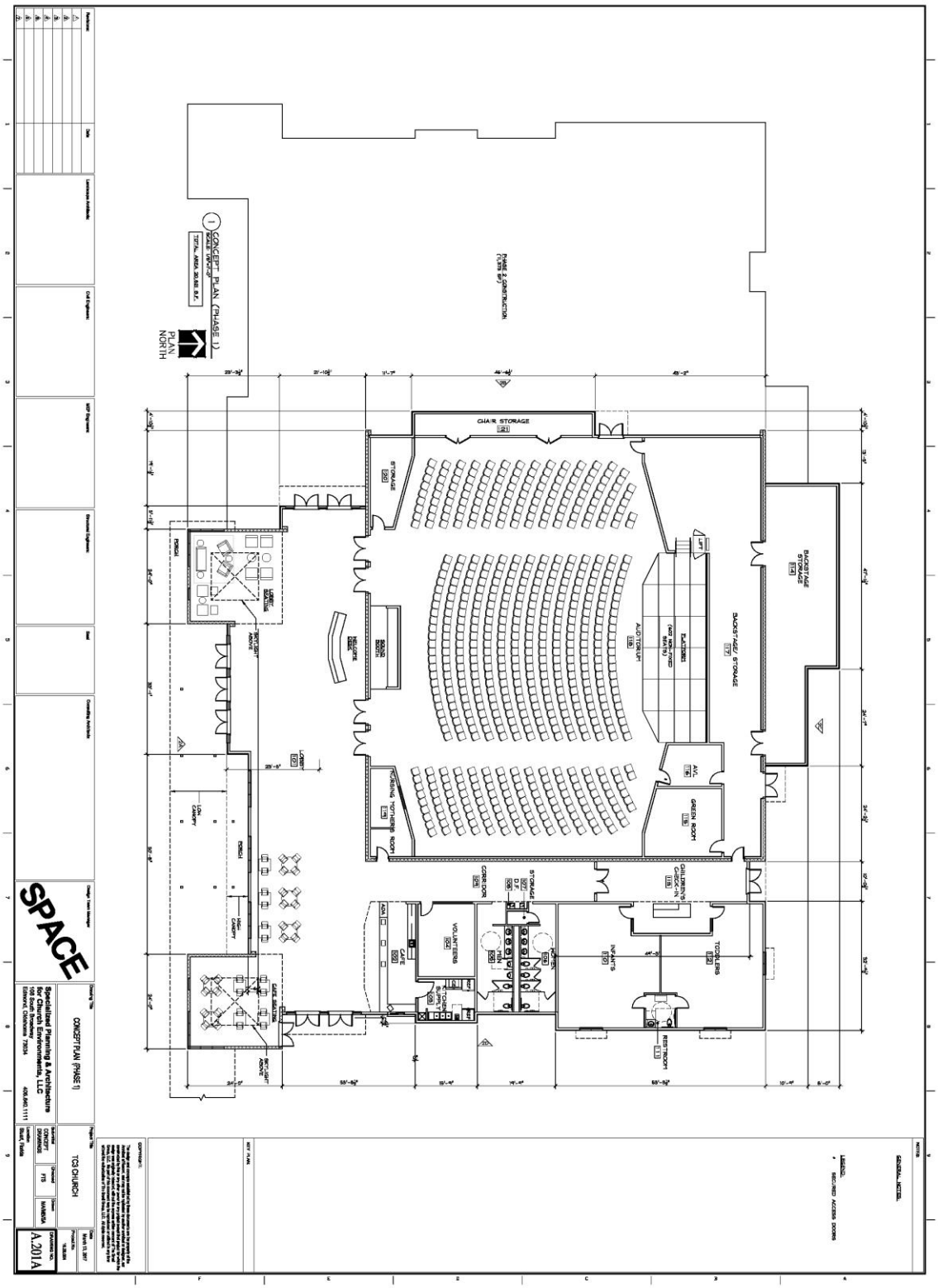

Ordinance 2353-2017 - TC3 Rezoning to CPUD and Final Site Plan Approval

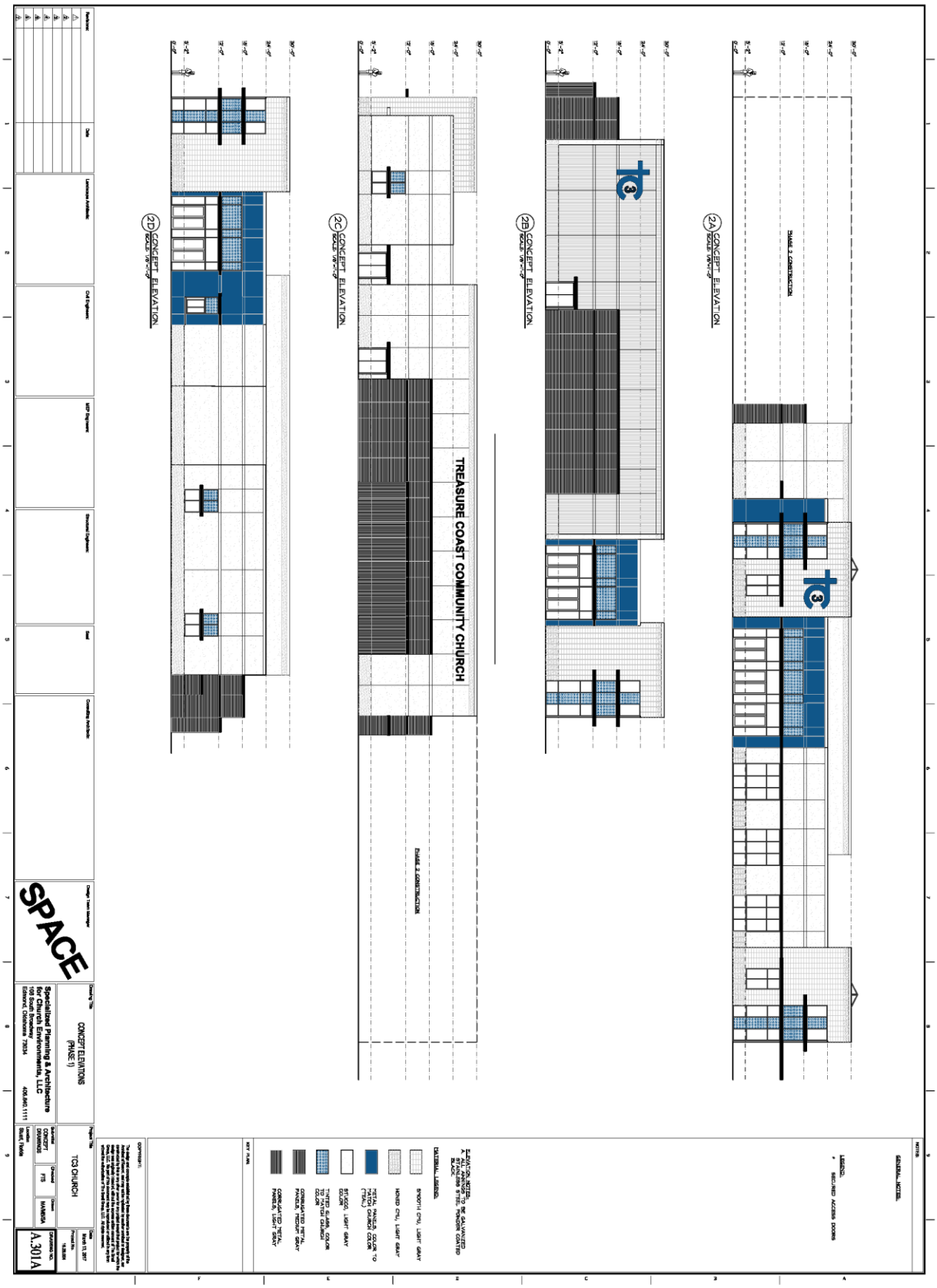

CITY OF STUART
CITY COMMISSION
MAY 8, 2017

Project Name: Treasure Coast Community Church	**Property Owner:** Gordon Mularski
Project No.: Z16120001	**Agent:** Michael Houston
Location: 20 NE Dixie Hwy 34994	

Application Summary			
Parcel Size (area)	10.4 Acres	**Report Date**	April 20, 2017
Existing Land Use	Downtown Redevelopment	**Proposed Land Use**	NA
Existing Zoning	Urban General	**Proposed Zoning**	CPUD
Existing Use	Church	**Proposed Use**	Church
Case Planner	Tom Reetz	**Last Submittal**	April 3, 2017
City & Consultant Approvals	Traffic; Fire; Planning & zoning; KH Engineering/Environmental - See Exhibits 2-7		
Brief Explanation	The applicant is requesting a rezoning from the current Urban General zoning designation to a Commercial Planned Unit Development (CPUD). This amendment also encompasses a Master Site Plan, Architectural Plans,		

	Elevations, and Landscape Plans approval.
Staff Recommendation: Recommend approval for zoning change to CPUD; Site Plan; Architectural Plans, Elevations and Landscape Plans.	

STAFF REPORT & RECOMMENDATION

I. DRAFT ORDINANCE

A. Legal Description
B. Location Map
C. Development Conditions
D. Development Documents

II. LEGAL NOTICE REQUIREMENTS

A. Requirements for Application – As a request for rezoning to a CPUD Commercial Planned Unit Development, this application has been noticed in accordance with the requirements set forth in ***Section 11.01.08*** of the City's Land Development Code

B. Site Posting Date: April 5, 2017
C. Mail Notice Postmark: April 5, 2017 to surrounding property owners (300 lineal feet)

III. APPLICATION

Treasure Coast Community Church is a church facility that currently operates in the Urban General in the City's Urban zoning district which is an allowable use for this zoning district. The church's agent and pastor have approached the city with plans to expand its existing facilities. Staff has recommended a zoning change to CPUD commercial planned unit development to allow for more flexibility and possibilities in the design and for staff to condition a timetable for development that would allow the church time for fundraising for the project. The church wishes to continue its current activities in the new worship building and have room for future growth. The proposed rezoning requires strict adherence to the development conditions and development documents such as, the proposed master site plan, the proposed architectural plans, elevations and landscaping.

In summary, the proposal consists of the construction of a 23,550 sq. ft. church building that will become part of an existing church campus.

- **Total Site Area** 453,024 SF or 10.4 acres
- **Proposed Building:** 32,572 Sq. Ft.
- **Existing Building** 11,132 Sq. Ft.
- **Proposed Buildings** Worship Center (2 phases), 2 Story Office building.
- **Impervious area** 219,906 SF 47 %
- **Pervious Area** 240,959 SF 53%
- **Parking Spaces** 392 spaces includes 12 HC spaces and 6 spaces reserved for Haney Creek Preserve Trail Head use.

IV. HISTORY OF THE SITE

The property is owned by Treasure Coast Community Church who purchased the property in 2007. Prior to the church's purchase, it had been used as a Gym/Racquetball club. The church obtained an Urban Code Special Exception to allow for a change of use and approve aspects of the site and exterior Architectural elevations which did not necessarily meet the minimum Urban Code requirements. The church later purchased the 8 acre + abutting undeveloped parcel in 2013 and gained a unity of title for the two parcels and a variance for temporary parking.

V. STAFF ANALYSIS

A. Site and Area Characteristics

The subject property is situated on the SE corner of NW & NE Dixie Hwy. There is currently one main entrance from NE Dixie Highway at the eastern end of the site that services the existing church building. The property consist of 10.4 acres with a zoning designation of Urban General and a future land use plan of Downtown Redevelopment. The surrounding properties are a combination of Professional office, warehouse, retail and an existing church to the north.

As currently requested, the site will be developed in three phases. The first phase consists of a

32,572 sq. ft. worship center which will subsequently have a second phase 32,572 square foot addition. Phase three of the project is a 2 story Professional Office building which will house mainly non-profit organizations.

Parking

The parking is as follows:
Proposed Worship Center = 1space/4 seats @907 seats = 227 spaces
Proposed 2 Story Office Building = 1 space/300 Sq. Ft. 17,000 Sq. Ft. = 57 spaces
Existing Building Office and Classrooms = 1 space/300 Sq. Ft. = 26 spaces
Total Spaces required = 257 spaces
Total spaces provided = 392 spaces

274 of the parking spaces consist of stabilized grass parking which are counted as being 50% pervious.

Landscaping/Wetlands

A dry retention area has been created to capture on site drainage and its perimeter is planted with native grasses and trees. The entire upland preserve area encourages wildlife and is called a pine flat wood forest forest. The native plants, trees and shrubs exceeds to code requirement of 50% native. See Landscape
Plan L-2 by HJA Design that includes a 4' mulch trail that meanders through the otherwise untouched Pine flatwood forest.

B. Land Development Code Consistency Review

The application has been reviewed for consistency with the City's LDC. The proposed development has been found in compliance with the applicable regulations set forth in Section 2.07.00 pertaining to PUD's.

A. Purpose. The purpose of this section 2.07.00 is to provide an alternative means of residential, commercial, public service and industrial land development and an alternative zoning procedure that may be used to establish residential, commercial, public service and industrial planned unit development zoning districts at appropriate locations and in accordance with the planning and development objectives of the city.

A planned unit development (PUD) established according to the provisions of this section may depart from the strict application of use, setback, minimum lot requirements, parking requirements, and other requirements of standard zoning districts. A PUD shall be consistent with the overall planning and development goals and objectives of the city as reflected by the City of Stuart Comprehensive Plan. A primary purpose of this section is to provide standards by which such flexibility may be accomplished while maintaining and protecting the public health, safety and welfare of the citizens.

B. Commercial planned unit development (CPUD) districts.

1. Location. A CPUD may be located anywhere in the city in any area defined and described "office/residential, **"**commercial**",** "**downtown redevelopment**" or "neighborhood/special district" by the Future Land Use Element of the City of Stuart's comprehensive plan and which is of suitable character and compatible with surrounding uses as determined by the City Commission.

2. Uses permitted in a CPUD district. The buildings, structures, land or water within a CPUD district may be used only for the following purposes:

a. Any and all uses set forth in the present zoning classifications of R-1, R-2, R-3, B-1, B-2 and B-4 inclusive, providing such uses are compatible with uses on adjacent property as determined by the City Commission.

VI. ATTACHMENTS

Attachment A: Site and Area Characteristics

Exhibit 1: Future Land Use Map
Exhibit 2: Existing Zoning Map
Exhibit 3: Aerial Photograph

Attachment B: Technical Review Memorandums

Exhibit 2: Traffic Statement – Velcon Group; Dated 3.27.17
Exhibit 3: City of Stuart Fire Department; Dated 12.09.16
Exhibit 4: City of Stuart Planning& Zoning; Dated 1.27.17
Exhibit 5: Kimley Horn Engineering/Environmental; Dated 1.27.17

NE SR 707

NW SR 707

Legend

- LOW DENSITY RESIDENTIAL
- MULTI-FAMILY RESIDENTIAL
- OFFICE / RESIDENTIAL
- COMMERCIAL
- INDUSTRIAL
- MARINE / INDUSTRIAL
- PUBLIC
- INSTITUTIONAL
- DOWNTOWN REDEVELOPMENT
- EAST STUART
- CONSERVATION
- RECREATION
- NEIGHBORHOOD / SPECIAL DISTF

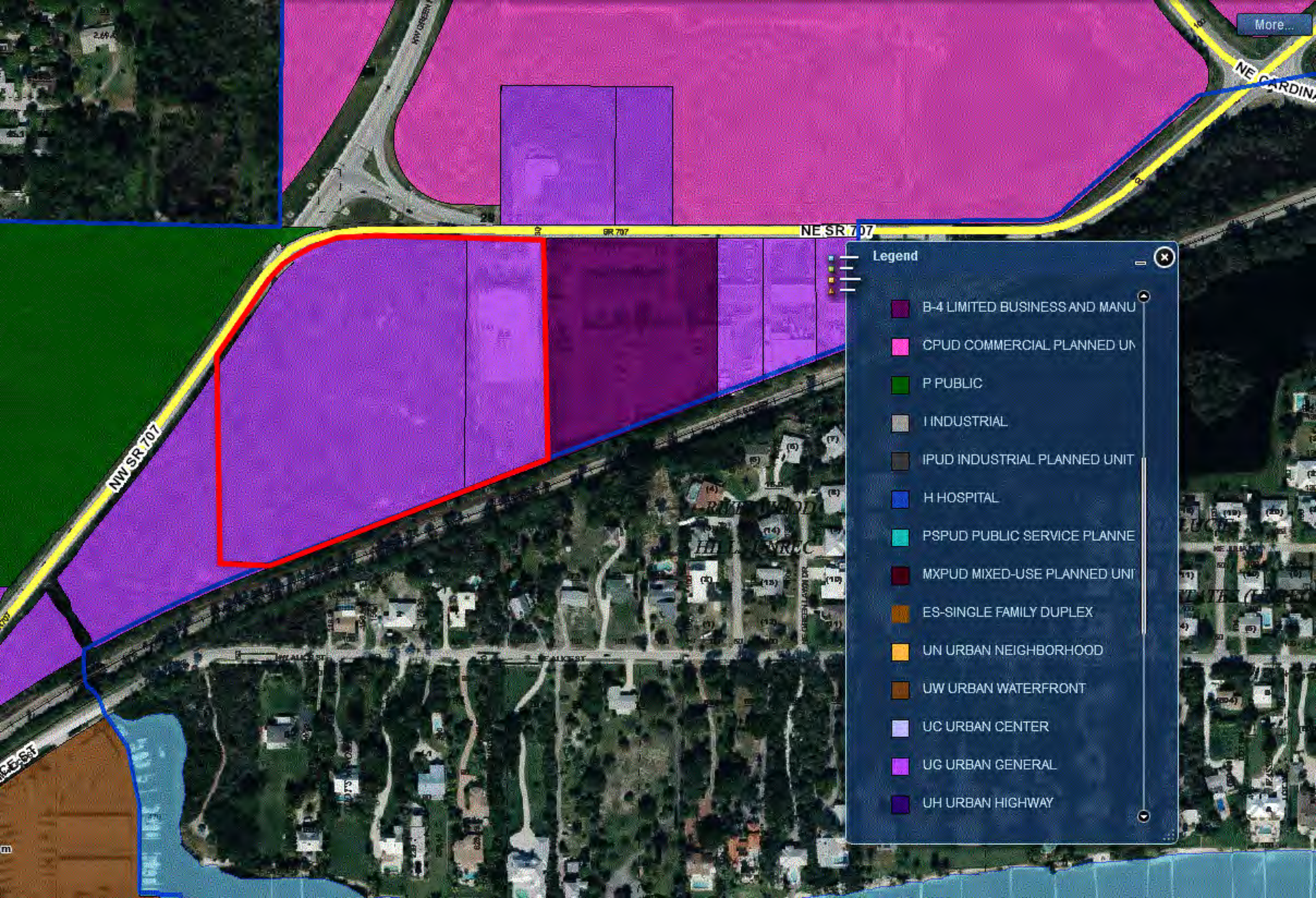
More...
NE SR 707
NW SR 707
NE ALICE ST
Legend
B-4 LIMITED BUSINESS AND MANU
CPUD COMMERCIAL PLANNED UN
P PUBLIC
I INDUSTRIAL
IPUD INDUSTRIAL PLANNED UNIT
H HOSPITAL
PSPUD PUBLIC SERVICE PLANNE
MXPUD MIXED-USE PLANNED UNI
ES-SINGLE FAMILY DUPLEX
UN URBAN NEIGHBORHOOD
UW URBAN WATERFRONT
UC URBAN CENTER
UG URBAN GENERAL
UH URBAN HIGHWAY

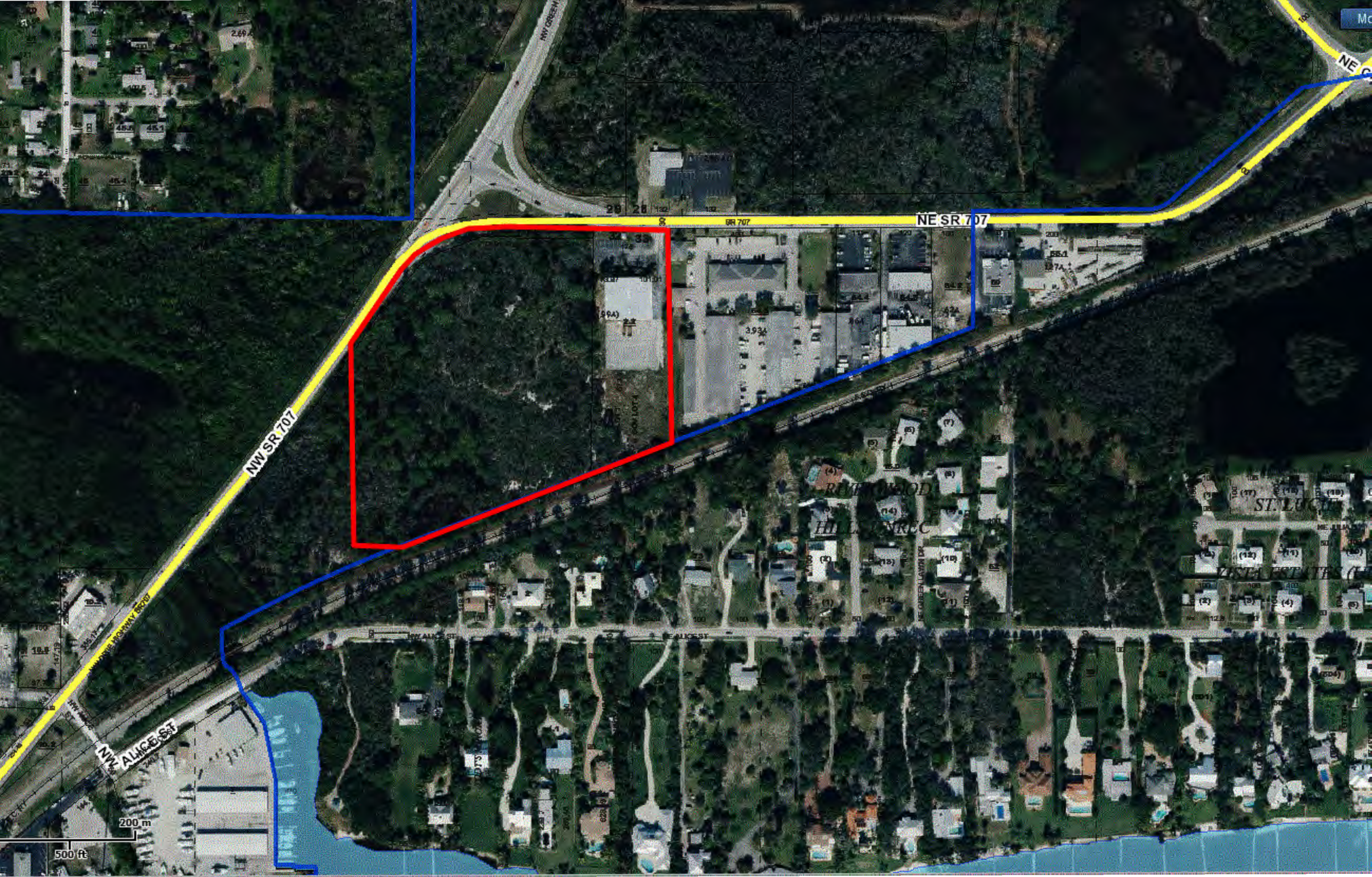
NE SR 707
NW SR 707
NW ALICE ST
NW ALICE ST
NW GREEN HILL DR
NE SR 707
200 m
500 ft

Kimley»Horn

To: Tom Reetz
Project Planner
City of Stuart Development Department

From: Nicholas J. Mora, P.E.
Kimley-Horn and Associates, Inc.

Date: April 27, 2017

Re: **Treasure Coast Community Church**
Review of Traffic Impact Statement

Kimley-Horn has reviewed the Traffic Statement (dated March 27, 2017) prepared by Velcon Group, Inc. related to the abovementioned project. Please find below our review comments pertaining to the development's impacts to adjacent transportation facilities.

1. The trip generation calculations are based on the Institute of Transportation Engineers' (ITE) *Trip Generation Manual*, 7th Edition. This is not the most current version, as the 9th Edition is now available. However, using the 7th Edition results in a slightly higher number of projected peak hour trips and is therefore conservative and acceptable.

2. The trip generation calculations need to account for the 17,000 square feet of office building space in Phase 3. It appears only half of the 17,000 square feet was accounted for.

3. The development is projected to generate more than 20 peak hour trips and therefore requires a Traffic Study to be performed in accordance with section 4.05.02 of the City's Land Development Code. Per section 4.05.02, at a minimum, the Traffic Study shall evaluate directly accessed roadway segments on the development's first accessed roadways within the Stuart Concurrency Roadway Network. Furthermore, all roadway links within the Stuart Concurrency Roadway Network where project traffic is estimated to consume five percent or greater of the adopted level-of-service capacity shall also be included in the study (in addition to the directly accessed roadway segments).

4. The traffic statement indicates that the Martin County 2015 Roadway LOS Inventory Report does not contain data for the adjacent segment of NW Dixie Highway or the adjacent segment of NE Dixie Highway. For the purposes of evaluating the percent impact on these two adjacent roadway segments which the project proposes access along, we recommend using a generalized peak hour directional service capacity of 750, which is consistent with data from FDOT's Generalized LOS table and is consistent with the capacity applied for the road segment of Green River Parkway from Dixie Highway to Baker Rd.

Thank you for the opportunity to assist the City of Stuart in reviewing the noted project. Please contact us if you have any questions or need additional information. Should the applicant or the applicant's traffic engineer desire to contact me directly to discuss these comments further, my direct phone number is (352) 438-3010.

Kimley»Horn

Memorandum

To: Tom Reetz
From: Lynn Kiefer, Sr. Environmental Scientist
Date: January 27, 2017
Subject: Treasure Coast Community Church (20 NE Dixie Hwy)
Rezoning/C-PUD (ref # 16003)

We have reviewed the rezoning submittal for the referenced site and evaluated the information provided based on the City's Land Development Code and Comprehensive Plan requirements. The following is a summary of our findings.

Section 5.01.00 Avoidance or Minimization of Wetland and other Environmental Impacts.

The applicant is persevering both on-site wetlands. Wetland Impact is limited to 0.06 acres for a driveway access only. This meets the code requirements for avoidance and minimization of wetlands.

Section 5.02.00 Environmental Assessment Report for Sites with Wetlands Greater Than One Acre

The Environmental Assessment included with the application is complete and meets the requirements of 5.02.00. The assessment did, however, identify the potential for gopher tortoise, eastern indigo snake, and Florida scrub-jay to occur on the site though none were observed during the site reconnaissance. Additional survey and permitting may be required prior to site plan approval. The code allows for the City development director to request correspondence from US Fish and Wildlife Service and Florida Fish and Wildlife Conservation Commission (FWC). The report recommended a gopher tortoise survey prior to site clearing. It is anticipated that if gopher tortoises are found during the survey a permit would be required from FWC and should serve as sufficient documentation from FWC. There were no recommendations for survey of FL scrub-jay. Correspondence from USFWS could be requested during site plan approval. No further action is anticipated regarding the eastern indigo snake.

Section 5.03.00 Wetlands

The approximate wetland limits have been provided. The site was previously permitted by the State. As indicated in the Environmental Assessment the wetland limits may need to be recertified due to the age of the approval. This would occur during future permitting efforts.

The site plan provides the required average 50 feet; minimum 25 feet upland buffer and the minimum 5 feet construction setback.

Impacts to wetlands have been avoided and minimized and the single impact is for road access which is one of the allowable conditions to approve the impact.

The upland buffers provide a greenway between the wetlands as required.

A mitigation plan will be required prior to site plan approval.

The information provided meets the requirements of 5.03.00 for a rezoning application.

Section 5.04.00 Environmentally Sensitive Lands

The required preservation areas have been provided. A monitoring and maintenance plan will be required for the future site plan submittal. The information submitted meets the intent of the code.

Section 5.05.00 Trees

Tree survey has been provided. Additional details regarding the relocation or protection of trees will be required during future site planning efforts.

Section 5.06.00 Mangrove and Shoreline
Not applicable

Section 5.07.00 Floodplain and Flood Damage Prevention
Information regarding floodplains was not provided in the Environmental Assessment or on the site plan. The boundary survey indicates that the site lies within Zone X and AE 6 but the limits were not shown on the map though it was referenced in the notes.

Summary:

The information submitted in the Environmental Assessment and meets the intent of Sections 5.01.00 – 5.05.00. As discussed above, additional information will be required during site plan approval and additional information regarding floodplain impacts, if any, should be provided.

SELECTION CRITERIA: Permit No = Z16120001 and Review Stop = F and Revision =

Note Date/Time	Date of Record	Operator	Note Code	Reminder Date
2016-12-09 13:30:49	12/09/2016	flasaga		

Frank Lasaga

This review represents approval of the conceptual information presented in the attached documentation, including but not limited to site layout. Determination of fire code requirements and compliance will be made upon submittal of site and construction documents.

1.27.17

TC3 - Planning and Zoning Comments.

1. Add necessary sidewalk(s) to connect with existing sidewalk on the west side of Dixie Highway.
2. 6.01.14B All parking lots shall be paved. Convert the 80 stabilized grass parking spaces at the front of the site to 80 paved parking spaces contiguous and with the existing paved parking lot. Transitory stabilized grass parking spaces in the rear of the Phase1 & Phase 2 buildings may remain as proposed provided the following code requirements are met.
    a. Provide a transit stop with benches and other seating facility with a trash receptacle, lighting and covered structure.
    b. 6.01.10.H Excess parking is discouraged, and in no case shall the number of extra spaces exceed (10) spaces or 10%, whichever is greater. Currently 227 parking spaces are required and 391 spaces are provided. Reduce the number of parking spaces to meet the above criteria.
    c. Provided 100 square feet for each additional parking space. (up to 10 spaces or 10%) The additional landscaping shall consist of shrubs, ground cover, grass and mulch.
    d. 67 additional spaces for the proposed 20,000 square foot building may be added to the 227 spaces for a total of 294 required spaces.
    e. 6.04.03 Provide 20% of the total gross area of the development shall be landscaped. The landscaped areas shall be located on the site in such a manner as to maximize preservation of existing trees with priority given to specimen and or historic trees as described in Chapter V, Resource Protection Related Development Standards of the City's Land Development Code. Show percentages and number of plantings in legend.
    f. 6.04.07C1 Provide not less than 50% of the required landscaping shall be interior landscaping exclusive of the required buffer. Interior landscaping shall be located around the periphery of structures and interspersed throughout parking areas. Show percentages and number of plantings in legend.
    g. 6.04.07C3 Provide not less than one tree for every 500 square feet of interior landscaped area.
    h. 6.04.07C2 Show interior landscaping around perimeter of buildings.
    i. Provide landscaping in the city's right of way with the appropriate species for wet/dry conditions, i.e. magnolia, cypress, etc.
    j. 6.04.07C8 not less than 50 percent of trees used in parking area interior landscaping shall be shade trees. Show percentages and number of plantings in legend.
    k. Provide a landscape berm of not less than 20 feet in the buffer between State Road 707 and the Phase one and phase 2 buildings. All trees within this strip shall be not less than 16 feet high at installation with a spread of six feet. Shrubs may be clustered.

    6.05.02. Building design and location.

    l. A. All commercial buildings shall be designed to maintain and enhance the attractiveness of the streetscape and the existing architectural design of the community. Facades shall be designed to reduce the mass or scale and uniform monolithic appearance of large unadorned walls, while providing visual interest. The buildings mass shall be varied in height and width so that it appears to be divided into distinct massing elements and details that can be percieved at the

scale of the pedestrian. Corner lots at an intersection of two or more arterial of collector roads shall be designed with additional architectural embellishments, such as corner towers or other design features, to emphasize their location as gateways and transportation points within the community. Revise plans and elevations as necessary.

m. *6.05.02.C. Building orientation.* Building facades adjacent to arterial or Collector Street shall either have windows along 50 percent of their horizontal length or a primary entrance. Revise elevations as necessary.

n. *6.05.02.E. Massing*, 1. No horizontal length or uninterrupted curve of a primary façade shall exceed 100 linear feet. Varied lengths are desirable. Projections and recesses shall have a minimum depth of three feet with 25 percent of these having varied length with a minimum deferential of one foot. 2. A single wall plane shall not constitute more than 60 percent of each affected ground floor primary facade. Revise elevations as necessary.

o. Other design features. Provide a minimum of five (5) of the following building treatments:

    a. Overhangs;
    b. Arcades, minimum of eight feet clear in width;
    c. Sculptured artwork;
    d. Raised cornice parapets over doors;
    e. Peaked roof forms;
    f. Display windows;
    g. Ornamental and structural architectural details, other than cornices, which are integrated into the building structure and overall design;
    h. Clock or bell towers;
    i. Decorative light fixtures;
    j. Decorative landscape planters or planting areas, a minimum of five feet wide, and areas for shaded seating consisting of a minimum of 100 square feet;
    k. Water elements, a minimum of 50 square feet in area.
    l. Courtyards along the front building façade.

Revise Elevations as necessary.

p. Roofs and gutters. The roofs and gutters of the principal building shall be constructed of any of the following materials and in the following specified manner.

    Materials:

    a. Cedar shingles with factory treated class B finish.
    b. Steel, copper and factory painted aluminum standing seam, batten seam, or Bermuda roofing.
    c. Galvanized steel "5-V crimp" roofing panels.
    d. Galvanized metal or copper shingles of Victorian or diamond shape or pattern or of another dimension, which is approved by the city development department.
    e. Asphalt dimensional shingles for residential buildings only.
    f. Built-up roof behind parapets.

g. Exposed half-round gutters of copper or galvanized steel.
h. Clay or cement barrel, s-shaped, flat cement, or mission tiles which are a shade of "red," "ochre," "cream" and "white" color shades provided that such coloring is integral to the clay or cement. No glazed or painted clay or cement tiles shall be allowed. No other shape of clay or cement tiles shall be permitted.
i. Manner.
j. Gable and simple hip roofs.
k. Flat with railings or parapets.
l. Shed roof attached to a wall higher than the ridge.
m. Rafters at overhangs shall be exposed.
n. Pitch:
    i. On principal building from 5-12 up to 12-12.
    ii. On sheds, porches and balconies not less than 3-12.
    iii. Tower roofs may be any pitch.
o. Aluminum fascia and soffits shall not be allowed. (Ord. 1453-96, 6-1-96)
p. For buildings which are located not more than five feet from the front property line, gutters must be shielded and may not drain onto the surface of public sidewalks. Gutters may be enclosed within a column or other architectural feature.

Revise roof design for proposal as necessary

q. 6.05.03 Blank walls areas. shall not exceed ten feet in vertical direction and 20 feet in horizontal direction of any facade. Control and expansion joints within this area shall constitute blank walls shall constitute blank wall area unless used a decorative pattern and spaced at intervals of six feet or less.

A. Relief and reveal work depth must be a minimum of one-half inch (see illustration 9).

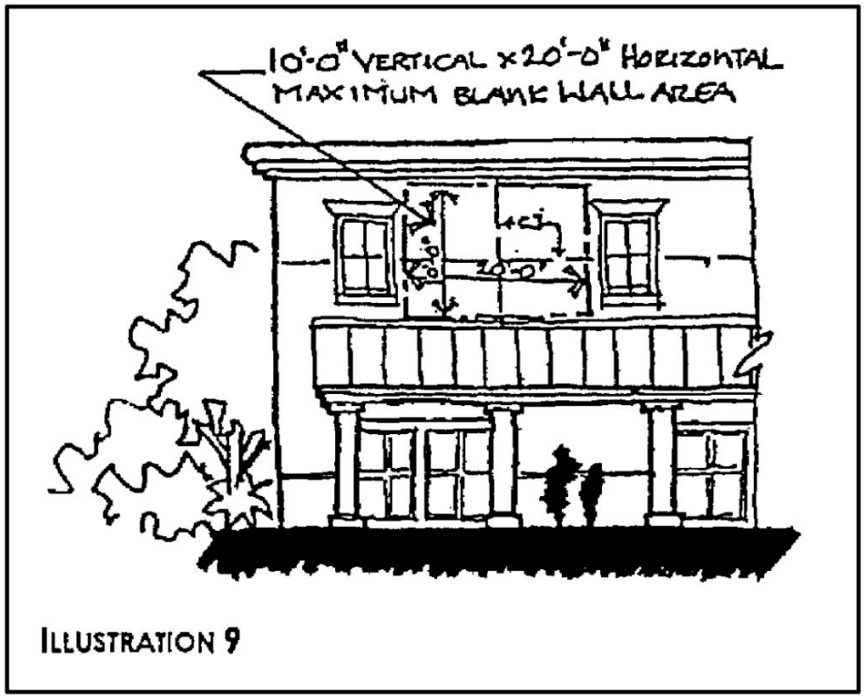

ILLUSTRATION 9

Revise Elevations as necessary.

Repeating facade treatments. Primary facades shall include a repeating pattern and shall include no less than three of the design elements listed below. At least one of these design elements shall repeat horizontally. All design elements shall repeat at intervals of no more than 30 feet, either horizontally or vertically.
Color change;
Texture change;
Material module change;
Expression of architectural or structural bays, through a change in plane of no less than 12 inches in width, such as a reveal, an offset, or a projecting rib (see illustration 10);

1. Architectural banding;
2. Building setbacks or projections, a minimum of three feet in width on upper levels; or
3. Pattern change.

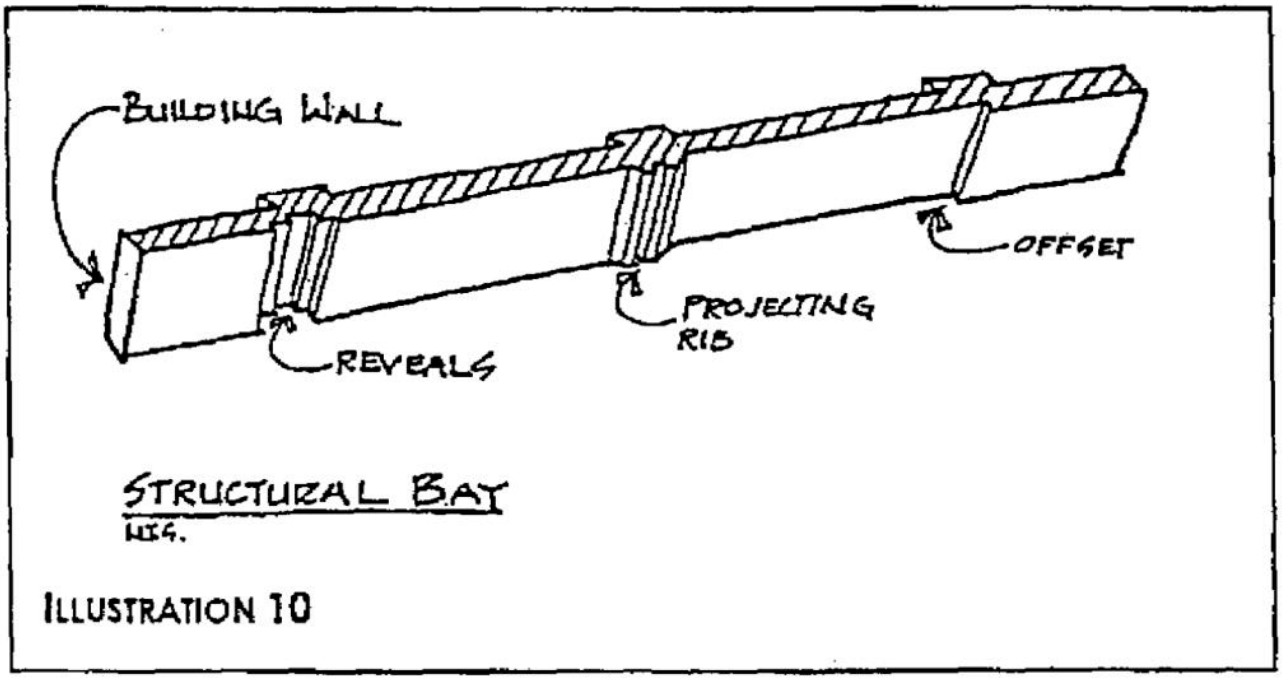

r. Sec. 6.05.05. Roof treatments for all commercial development.

a. Purpose and intent. Variations in roof lines shall be used to add interest to and reduce the massing of buildings. Roof features shall be in scale with building mass and shall complement the character of adjoining or adjacent buildings and neighborhoods. Roofing material shall be constructed of durable high quality materials in order to enhance the appearance and attractiveness of the community.

b. Roof edge and parapet treatment. At a minimum of two locations, the roof edge or parapet shall have a vertical change from the dominant roof design which is a minimum of three feet. At least one such change shall be located on a primary facade adjacent to a collector or arterial right-of-way (see illustration 11).

c.

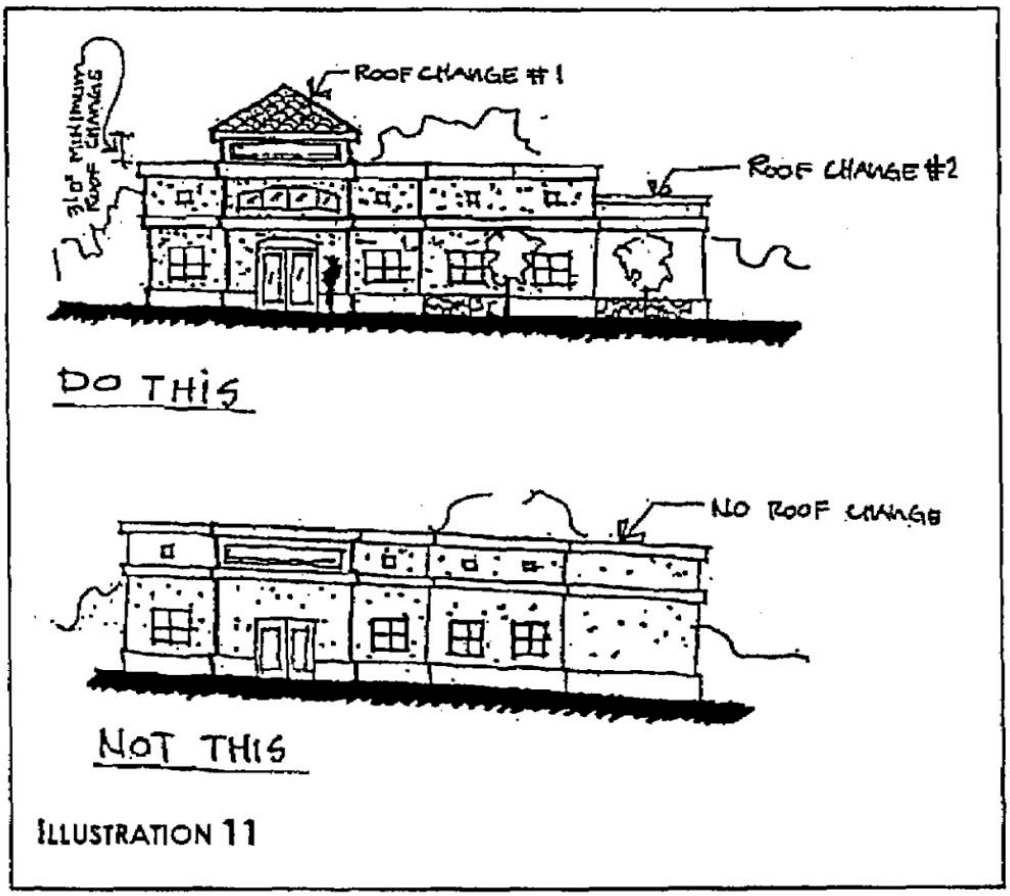

ILLUSTRATION 11

Roofs shall meet at least two of the following requirements:

1. Parapets shall be used to conceal roof top equipment and flat roofs;
2. Where overhanging eaves are used, overhangs shall be no less than three feet beyond the supporting walls with a minimum fascia of eight inches;
3. Three or more roof slope planes per primary facade (see illustration 12);
4. Sloping roofs, which do not exceed the average height of the supporting walls, with an average slope greater than or equal to one foot of vertical rise for every

d. three feet of horizontal run and less than or an average slope equal to one foot of
e. vertical rise for every one foot of horizontal run;
f. Three-dimensional cornice treatment which shall be a minimum of 12 inches in height with a minimum of three reliefs; or
g. Additional vertical roof changes with a minimum change in elevation of two feet.

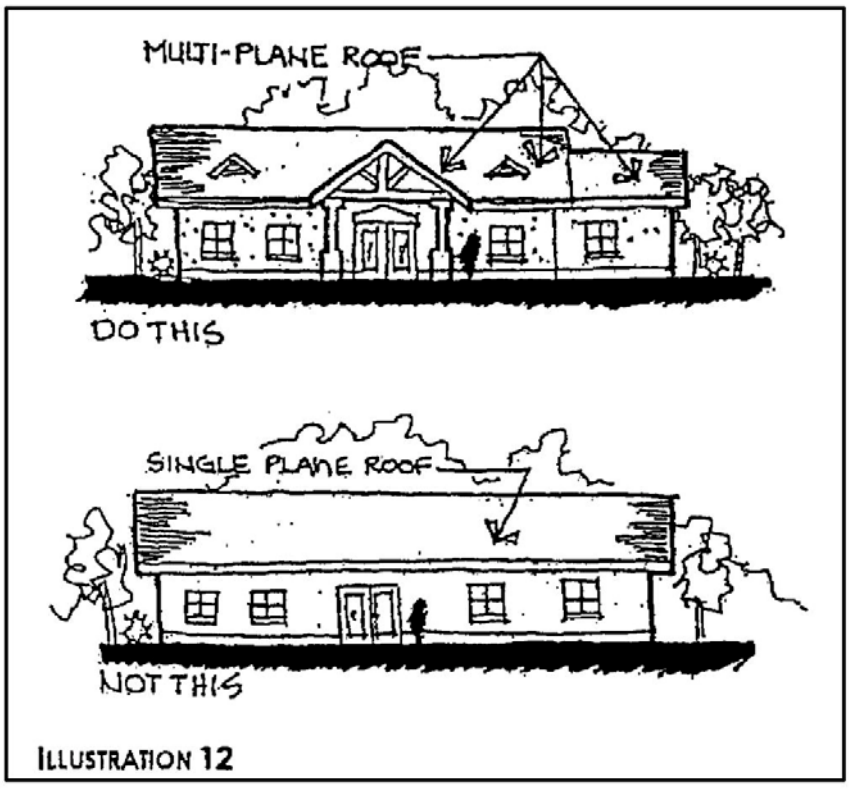

Revise elevations as necessar

EW Consultants, Inc.
Natural Resource Management, Wetland, and Environmental Permitting Services

TREASURE COAST COMMUNITY CHURCH (TC3)

WETLAND MAINTENANCE AND MONITORING PLAN/ PRESERVE AREA MANAGEMENT PLAN

Prepared for:

TC3

Prepared by:

EW CONSULTANTS, INC.

March 2017

© 2017 EW Consultants, Inc.

1000 SE Monterey Commons Boulevard, Suite 208 • Stuart, FL 34996 772-287-8771 • Fax 772-287-2988
www.ewconsultants.com

INTRODUCTION -

This Wetland Maintenance and Monitoring Plan/Preserve Area Management Plan (PAMP) has been developed for an 8.4+/- acre parcel of land referred to as the TC3 Addition located within the City of Stuart, Martin County, Florida. It is immediately south of the intersection of NW Dixie Highway and Green River Parkway (see Figure 1, Location Map). Two wetlands occur on-site: W-1 (0.51 acres, 100% preserved) on the south property line, and W-2 (0.66 acres, 0.54 acres preserved or 80%) which runs parallel to Dixie Highway. All preserved wetland and upland habitats as shown on the approved site plan will be maintained, monitored, and managed in accordance with this plan, the details of which are described below.

WETLAND AND UPLAND HABITAT PRESERVE -

Eradication of Nuisance and Exotic Vegetation -

Within all areas designated as preserve on the approved site plan, all nuisance and exotic vegetation as listed by the Florida Exotic Pest Plant Council will be eradicated from the wetland and upland preserve areas in perpetuity by the applicant or successors. Such activities will meet the following criteria:

- All exotic and nuisance vegetation eradication will be through herbicide application, hand clearing, and removal of cut material off-site.
- The criterion for acceptance of exotic and nuisance vegetation eradication will be 100 percent kill. If initial vegetation eradication efforts do not achieve this criterion, follow up treatments will be conducted.
- Cutting/treatment of the trunk and/or stump with an appropriately labeled herbicide will eradicate all Brazilian pepper, melaleuca and other woody exotic vegetation.
- The criterion for completion of the woody exotic vegetation eradication will be 100 percent kill. If initial exotic and nuisance vegetation eradication efforts do not achieve this criterion, follow-up treatment events will be conducted at a minimum on a quarterly basis for five years.
- All eradication of non-woody exotic vegetation will be through application of appropriately labeled herbicide. Any vegetative debris removed from the preserve areas will be handled in accordance with the disposal specifications.
- The criterion for acceptance of eradication for all non-woody exotic vegetation will be 100 percent kill. If initial eradication efforts do not achieve this criterion, follow up treatment will be conducted.

The exotic vegetation eradication in the wetland and upland preserve areas may generate vegetative debris that requires disposal. There will be a staging and storage area provided outside the limits of the preserve areas within the development footprint. Such vegetative debris removed from the preserves will then be disposed of as part of the site development process.

- Transport of vegetative debris from the wetland and upland preserve areas to the staging area will be conducted in a fashion that minimizes the distribution and dispersal of seeds.
- No living exotic or nuisance vegetative material will be left in the wetland or upland preserve areas. This plan allows for killing in place by herbicide application for non-woody plant material only.

All vegetative debris, either whole or chipped/mulched will be hauled off site and disposed of at a landfill or other such appropriately licensed facility.

Herbicides are required for the treatment of all stumps/trunks of woody vegetation to prevent re-growth, and for eradication of non-woody exotic and nuisance vegetation. Such herbicide application events within the preserves areas are expected to occur at a minimum on a quarterly basis for a minimum of five years after the initial exotic vegetation eradication effort is complete.

- All herbicide application activity will be conducted under the supervision of a Florida Department of Agriculture licensed applicator.
- All herbicide applied must include a visible tracer dye in the mix to facilitate observation of treated vegetation.

Replanting with Native Vegetation -

In preserves where exotic and nuisance plant eradication efforts leave un-vegetated areas, supplemental native planting may be necessary. As such, the typical wetland planting plan (Figure 2) and the typical upland scrub planting plan (Figure 3) shall be followed. Determining the number and type of plants will be done in consultation with SFWMD ERP Compliance staff after reviewing the site conditions within the affected preserve areas.

The vegetative success criteria for the wetland and upland preserve areas includes the requirement for 80 percent coverage of desirable vegetation and areal coverage of exotic vegetation at five percent and nuisance vegetation limited to 5 percent or less. After five years, the wetland and upland preserve areas will meet the vegetative success criteria of 80 percent coverage of desirable vegetation and areal coverage of exotic vegetation at five percent and nuisance vegetation limited to 5 percent or less. However, patches of open sand within scrub upland habitats are considered appropriate.

WETLAND AND UPLAND PRESERVE MONITORING PLAN -

This monitoring plan includes one transect through the center of Wetland 1 with two photo/data collection stations, one transect through Wetland 2 on the north side of the main entrance to the site with three photo/data collection stations, and another within the south portion of Wetland 2 also with three photo/data collection stations (see Figure 4).

The vegetative coverage will be measured as absolute coverage within an area of approximately 2,500 square feet at each monitoring station. The vegetation will be measured in percent coverage of the canopy/understory layer and ground cover. The total percent cover will not exceed 100 percent, and each species documented will be reported in both common and Latin names. The coverage will be measured by visual observation and will extend approximately 25 feet from the observer in each direction thus covering approximately 2,500 square feet at each station. Photos will be collected from each of the established monitoring stations to provide documentation of vegetative coverage. In addition to vegetative coverage documentation, any observed wildlife utilization or indicators of wildlife (i.e. tracks, scat, etc.) will be reported. Also, each report will include wetland water level observations as well as data from the closest available public rain gauge station.

The monitoring will be conducted on an annual basis and reports will be provided to SFWMD and the City of Stuart during the first five years so that vegetative maintenance activity can be closely tracked. The reports provided at the end of two years and five years will include a discussion and conclusion regarding achievement of the success criteria as per the permit.

Each monitoring report will include recommendations for maintenance, if necessary. The threshold for maintenance requirements will be any monitored area that has 5 percent or more total vegetative coverage by nuisance or exotic vegetation at any time during the monitoring period. Additionally, if the upland or wetland preserve areas have not achieved the success criteria it will be recommended for supplemental planting in order to meet the criterion. Vegetative maintenance of the all preserve areas on-site will be provided in perpetuity by the permittee or successors in accordance with permit requirements and this plan.

In order to further protect the wetland and upland preserve areas, preserve area signage will be installed as shown on Figure 4.

Below are the relevant preserve area management activities and due dates:

Activity	Months after SFWMD Construction Permit Issuance
Record Conservation Easement	One Month
Initiate Exotic Eradication	Two Months
Complete Exotic Eradication	Four Months
Conduct/Submit Time Zero Monitoring	Six Months
Submit First Annual Monitoring Report	12 Months
Submit Second Annual Monitoring Report	24 Months
Submit Third Annual Monitoring Report	36 Months
Submit Fourth Annual Monitoring Report	48 Months
Submit Fifth Annual Monitoring Report	60 Months

LEGEND

- SITE (8.4+/- AC)

0 1,000 Feet

N

TC3 PARCEL

LOCATION MAP

EW CONSULTANTS, INC.

1000 SE Monterey Commons Blvd., Suite 208
Stuart, FL 34996
772-287-8771 Fax 772-287-2988
www.ewconsultants.com

APRIL 2016

FIGURE

1

TYPICAL WETLAND
PRESERVE AREA PLANTING PLAN

NTS

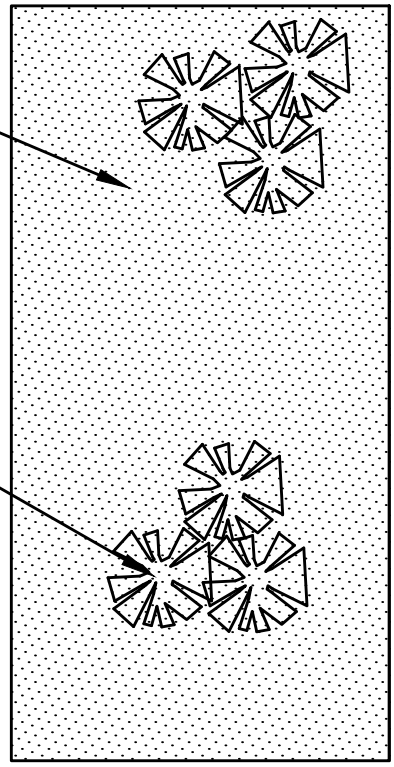

NOTE□
- Native ve□etati□□ t□ □e i□stalled t□ □i□ i□typi□al □□□resh□ater □etla□d ha□itat pla□t □□□ p□siti□□
- Pla□t □aterial □ay □e s□□stit□ted □ith □ther si□iliar □ative spe□ies.
- Pla□ti□□ □□a□tities t□ □e deter□i□e at ti□e □□pla□ti□□ as per existi□□ □ield □□□diti□□s.

TREASURE COAST COMMUNITY CHURCH
PRESER□ E AREA PLANTING PLAN

EW CONSULTANTS, INC.
1000 SE MONTEREY COMMONS BLVD., SUITE 208
STUART, FL 34996
772-287-8771 FAX 772-287-2988
WWW.EWCONSULTANTS.COM

FIGURE
2

TC3 PRESERVE PLANTING PLAN.dwg WETLAND PLANTING PLAN

SCRUBBY FLATWOODS REPLANTING SECTION

N.T.S.

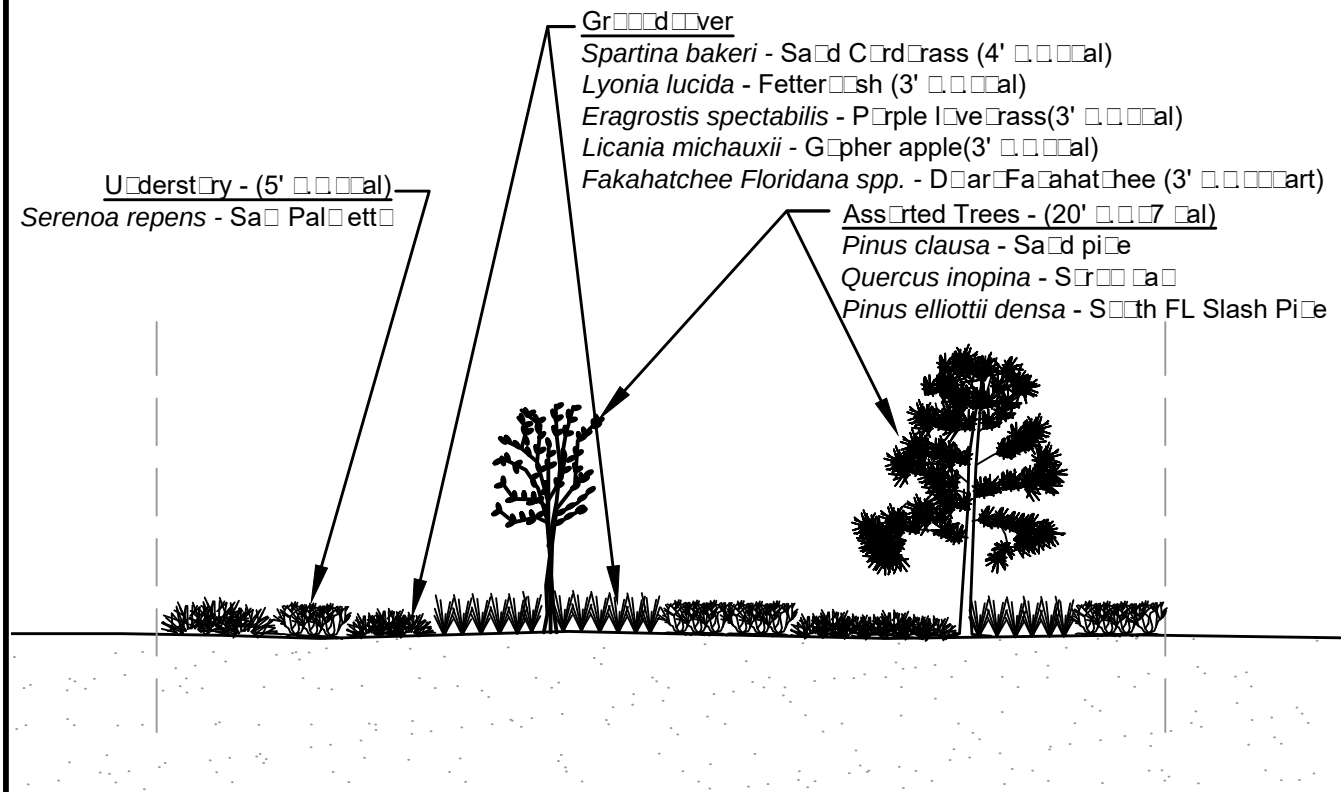

SCRUBBY FLATWOODS REPLANTING PLAN VIEW

N.T.S.

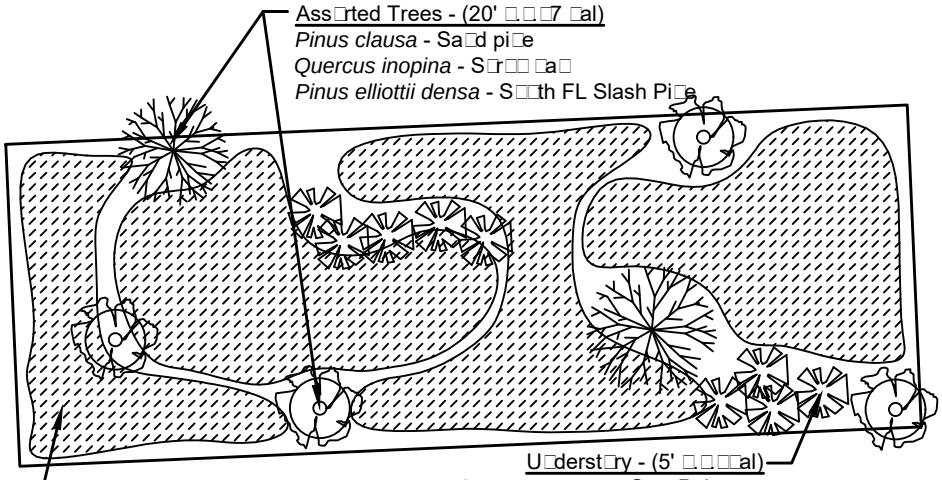

□UANTITY OF PLANTS WILL BE DETERMINED BY SI□E OF RESTORATION AREA AND SPACING (O.C.) OF SELECTED PLANTS.

REFERENCED SPECIES MAY BE SUBSTITUTED WITH OTHER APPROPRIATE NATIVE SCRUB SPECIES BASED ON AVAILABILITY.

NOTE□PLANTS TO BE INSTALLED AS TO MIMIC NATURAL OCCURRENCE.

TREASURE COAST COMMUNITY CHURCH

SCRUBBY FLATWOOD□ S REPLANTING PLAN

EW CONSULTANTS, INC.

1000 SE MONTEREY COMMONS BLVD., SUITE 208
STUART, FL 34996
772-287-8771 FAX 772-287-2988
WWW.EWCONSULTANTS.COM

FIGURE

3

'SCRUBBY FLATWOODS DETAIL.dwg SECTION

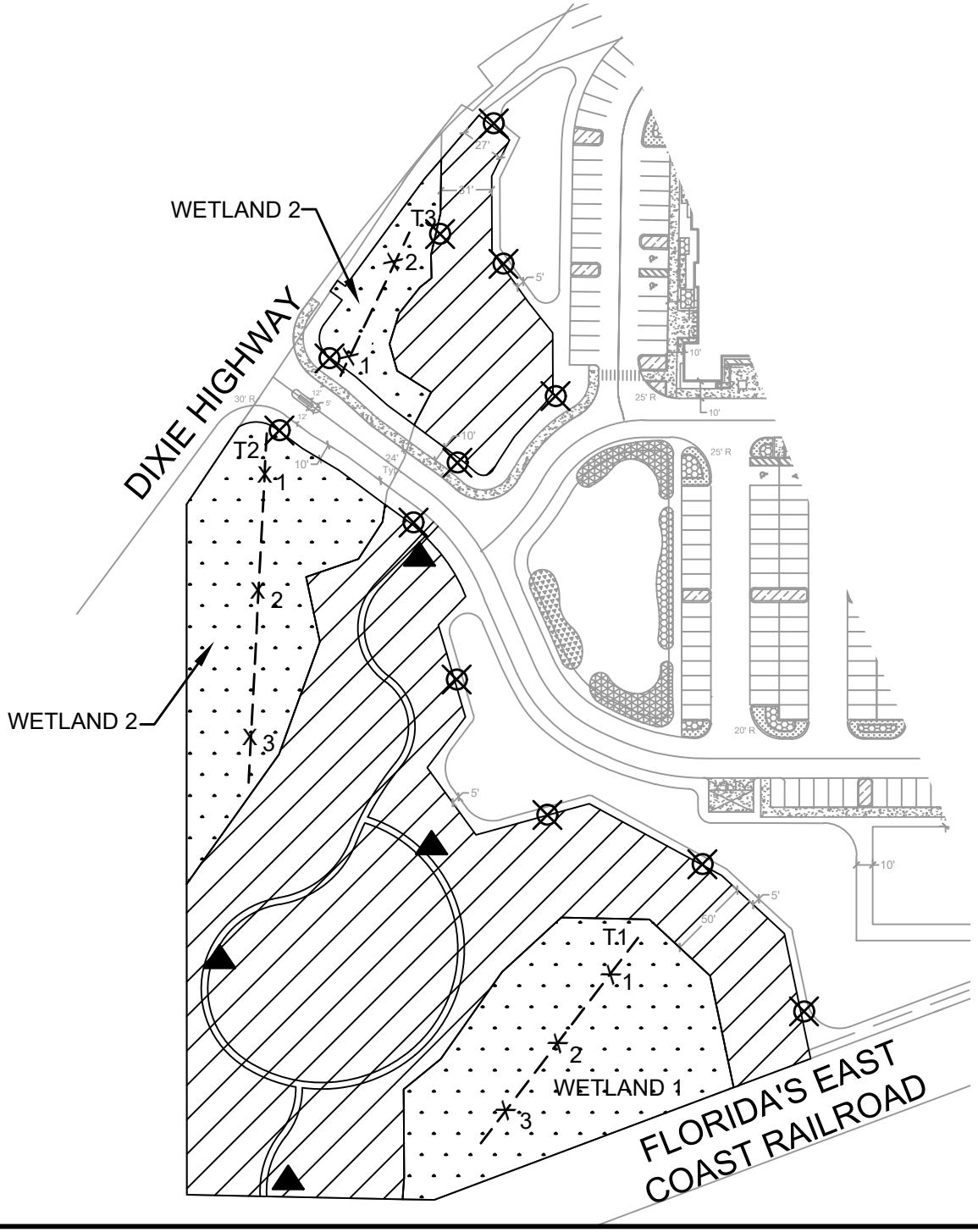

TYPICAL PRESERVE SIGN

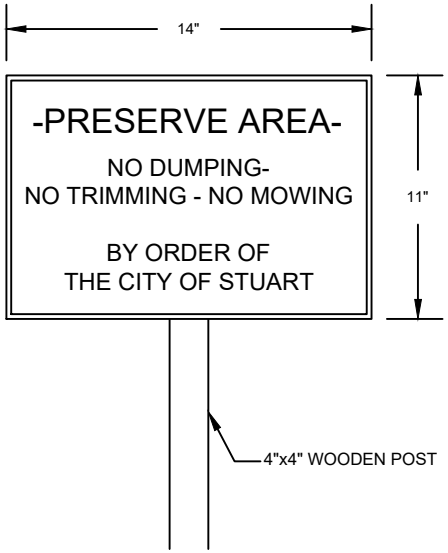

LEGEND

- WETLAND PRESERVE
- PRESERVE AREA SIGN (11)
- INTERPRETIVE SIGN (4)
- T2 1 2 - MONITORING TRANSECT WITH STATION & PHOTO STATION

0 100
SCALE IN FEET

TREASURE COAST COMMUNITY CHURCH MONITORING MAP

EW CONSULTANTS, INC.
1000 SE MONTEREY COMMONS BLVD., SUITE 208
STUART, FL. 34996
772-287-8771 FAX 772-287-2988
WWW.EWCONSULTANTS.COM

FIGURE 4

TC3 PARCEL.dwg MONITORING

MINUTES

LOCAL PLANNING AGENCY/PLANNING ADVISORY BOARD MEETING
APRIL 20, 2017 AT 5:30 PM
CITY COMMISSION CHAMBERS
121 S.W. FLAGLER AVE.
STUART, FLORIDA 34994

LOCAL PLANNING AGENCY/PLANNING ADVISORY BOARD MEMBERS
Chair – Bill Mathers
Vice Chair – Li Roberts
Board Member - Larry Massing
Board Member – Michael Herbach
Board Member – Susan O'Rourke
Board Member – Ryan Strom
Board Member - John Leighton
Ex Officio - Garret Grabowski

ADMINISTRATIVE
Development Director, Terry O'Neil
Board Secretary, Michelle Vicat

CALL TO ORDER **5:30 PM**

ROLL CALL:

Present: Chair Mathers. Ryan Strom, Larry Massing, John Leighton, Michael Herbachc

Absent: Li Roberts, Susan O'Rourke

APPROVAL OF MINUTES

Motion: Action: Approve, Moved by John Leighton, Seconded by: Larry Massing. Motion passed unanimously

COMMENTS FROM THE PUBLIC (5 min. max): None

COMMENTS FROM THE BOARD MEMBERS: None

OTHER MATTERS BEFORE THE BOARD:

Michael Herbach suggested additional bus stops on US1 due to extra traffic and Marty busses.

Terry O'Neil, Development Director said Wynne Project advertising was faulty and there have been two misfires since then and they had asked if they could bring it back to a special meeting on May 4th but it was again mis-advertised so it will be coming back to the regular meeting in June.

1. ORDINANCE No. 2353-2017; AN ORDINANCE OF THE CITY COMMISSION OF THE CITY OF STUART, FLORIDA APPROVING A REZONING FROM "URBAN GENERAL" IN THE CITY'S URBAN DISTRICT TO "CPUD"- COMMERCIAL PLANNED UNIT DEVELOPMENT ON THE CITY'S OFFICIAL ZONING MAP FOR A 10.4 ACRE PARCEL LOCATED AT 20 NE DIXIE HIGHWAY, SAID LAND BEING MORE FULLY DESCRIBED IN EXHIBIT "A" ATTACHED, ESTABLISHING THE TREASURE COAST COMMUNITY CHURCH COMMERCIAL PLANNED UNIT DEVELOPMENT CONSISTING OF A NEW 32,572 SQUARE FOOT WORSHIP CENTER BUILDING AND A 17,000 SQUARE FOOT TW O STORY OFFICE BUILDING DESIGNATED FOR NON-PROFIT ORGANIZATIONS; APPROVING A MASTER DEVELOPMENT PLAN; PROVIDING FOR DEVELOPMENT CONDITIONS; PROVIDING A TIMETABLE FOR DEVELOPMENT; PROVIDING FOR ACCEPTANCE BY THE APPLICANT; DECLARING THE PLAN TO BE CONSISTENT WITH THE CITY'S COMPREHENSIVE PLAN; REPEALING ALL ORDINANCES IN CONFLICT HEREW ITH; PROVIDING FOR SEVERABILITY; PROVIDING DIRECTIONS TO THE CITY CLERK; PROVIDING FOR AN EFFECTIVE DATE, AND FOR OTHER PURPOSES.

PRESENTATION: Tom Reetz, Senior Planner
Michael Houston, HJA Design Studio

PUBLIC COMMENT: None

BOARD COMMENT:

Chair Mathers asked if all comments have been resolved.

Tom Reetz said they have been.

Motion: Action: Approve, Moved by John Leighton, Seconded by Ryan Strom. Motion passed unanimously.

2. ORDINANCE NO. 2352-2017 AN ORDINANCE OF THE CITY OF STUART, FLORIDA, ANNEXING THREE PARCELS OF LAND WEST OF SE FEDERAL HIGHWAY, CONSISTING OF 13.57 ACRES, SAID PARCELS BEING MORE FULLY DESCRIBED IN EXHIBIT "A" ATTACHED HERETO; PROVIDING DIRECTIONS TO THE CITY CLERK; PROVIDING FOR REPEAL OF ALL ORDINANCES IN CONFLICT; PROVIDING FOR SEVERABILITY; AND PROVIDING FOR AN EFFECTIVE DATE, AND FOR OTHER PURPOSES.

PRESENTATION: Pinal Gandhi-Savdas, Senior Planner

PUBLIC COMMENT: None

BOARD COMMENT:

Bill Mathers asked if there were any comments from the county.

Pinal Gandhi-Savdas said there weren't.

MOTION: Action: Approve, Moved by Ryan Strom, Seconded by Michael Herbach. Motion passed unanimously.

3. *Staff note: The applicant did not adequately notice the property with the correct signage by the advertising date. Specifically, the signage was installed with only one sign face and not perpendicular to the roadway. Staff recommends the LPA continue the item to a special meeting to be held May 4, 2017.*

AN ORDINANCE OF THE CITY OF STUART, FLORIDA, AMENDING THE "BAKER ROAD COMMONS PUD" (ORDINANCE NO. 2312-2015), CONSISTING OF 3.02 ACRES, LOCATED AT 1440 NW FEDERAL HIGHWAY AND OW NED BY W YNNE BUILDING CORPORATION, A FLORIDA CORPORATION, SAID LAND BEING MORE FULLY DESCRIBED IN EXHIBIT "A" ATTACHED HERETO; APPROVING AN AMENDED SITE PLAN; APPROVING CERTAIN DEVELOPMENT DOCUMENTS; DECLARING THE DEVELOPMENT TO BE CONSISTENT WITH THE COMPREHENSIVE PLAN OF THE CITY; APPROVING AMENDED DEVELOPMENT CONDITIONS AND A TIMETABLE FOR DEVELOPMENT; PROVIDING DIRECTIONS TO THE CITY CLERK; PROVIDING FOR REPEAL OF ALL ORDINANCES IN CONFLICT; PROVIDING FOR SEVERABILITY; AND PROVIDING FOR AN EFFECTIVE DATE, AND FOR OTHER PURPOSES.

PRESENTATION: Stephen Mayer, Senior Planner

PUBLIC COMMENT:

BOARD COMMENT:

MOTION

STAFF UPDATE: None

ADJOURNMENT:

MOTION: Action: Adjourn, Moved by Larry Massing, Seconded by Michael Herbach. Motion passed unanimously.

_____ _____

Bill Mathers, Chair **Michelle Vicat, Board Secretary**