PRELIMINARY ENGINEERING PLANS AND SPECIFICATIONS

FOR

KANNER CPUD

SECTION 16, TOWNSHIP 38S, RANGE41E

STUART, FLORIDA

KANNER CPUD - PRELIMINARY ENGINEERING 19 March 2021 #20-313

LOCATION MAP

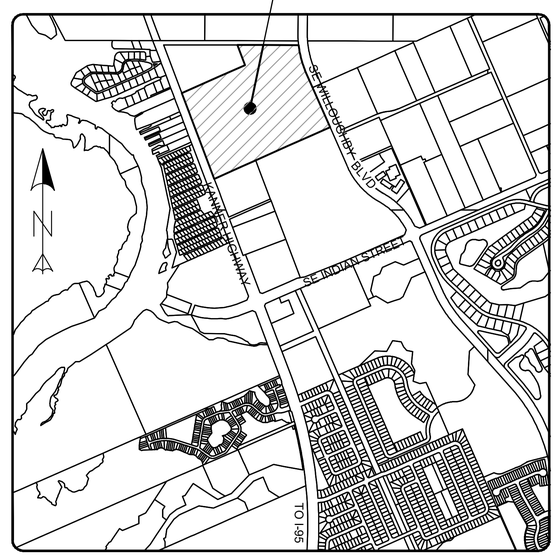

VICINITY MAP

INDEX OF SHEETS

1. COVER
2. OVERALL PAVING, GRADING, & DRAINAGE PLAN
3. OVERALL UTILITY PLAN
4. PAVING, GRADING & DRAINAGE DETAILS
5. UTILITY DETAILS
6. UTILITY DETAILS
7. UTILITY DETAILS
8. UTILITY DETAILS
9. UTILITY DETAILS

ENGINEERS ✪ SURVEYORS
ENVIRONMENTAL

PORT SAINT LUCIE OFFICE
10250 SW VILLAGE PARKWAY - SUITE 201
PORT SAINT LUCIE, FL 34987
☏ 772-462-2455
www.edc-inc.com

F.B.P.E. CERTIFICATE OF AUTHORIZATION 9935
L.B. CERTIFICATE OF AUTHORIZATION 8098

DAVID C. BAGGETT, P.E.(DATE)
#81375

10250 SW VILLAGE PKWY - SUITE 201
PORT SAINT LUCIE, FL 34987
☏ 772-462-2455

THIS DOCUMENT, TOGETHER WITH THE CONCEPTS AND DESIGNS PRESENTED HEREIN, AS AN INSTRUMENT OF SERVICE, IS INTENDED ONLY FOR THE SPECIFIC PURPOSE AND CLIENT FOR WHICH IT WAS PREPARED. REUSE OF AND IMPROPER RELIANCE ON THIS DOCUMENT WITHOUT WRITTEN AUTHORIZATION AND ADOPTION BY EDC, INC. SHALL BE WITHOUT LIABILITY TO EDC, INC.

Z:\EDC-2020\20-313 - Costco Stuart - Kanner Highway\ENGINEERING\AutoCAD\DWG\20-313 Preliminary Eng R1.dwg, Cover, 3/19/2021 8:49:35 AM, Jessica, EDC, Inc.

DATUM:
ALL ELEVATION ARE BASED ON NORTH AMERICAN VERTICAL DATUM OF 1988.
NGVD29 = NAVD88 + 1.475

NOTE:
THE DRAINAGE SYSTEM AND PROPOSED GRADING CRITERIA DEPICTED ON THIS SHEET IS PRELIMINARY AND SUBJECT TO CHANGE UPON FINAL DESIGN COORDINATION WITH STATE AND LOCAL REGULATORY ENTITIES

DRAINAGE STATEMENT:
THE PROPOSED PROJECT WILL CONSTRUCT A MASTER STORWATER MANAGEMENT SYSTEM CONSISTING OF A SERIES OF INTERCONNECTED WET DETENTION LAKES AND DRY RETENTION PONDS. THE SYSTEM WILL BE DESIGNED TO SATISFY THE APPLICABLE CRITERIA OF THE SOUTH FLORIDA WATER MANAGEMENT DISTRICT (SFWMD), CITY OF STUART, FLORIDA DEPARTMENT OF TRANSPORTATION (FDOT), AND MARTIN COUNTY. THE PROJECT WILL PROVIDE THE REQUIRED 0.50" OF DRY PRE-TREATMENT FOR THE COMMERCIAL USE AREAS BY UTILIZING A MIX OF DRY RETENTION PONDS AND UNDERGROUND EXFILTRATION TRENCH. THE PROJECT WILL BE DESIGNED TO MEET THE ALLOWABLE DISCHARGE RATE FOR THE EXISTING DRAINAGE CONNECTIONS DOWNSTREAM TO THE KANNER HIGHWAY DRAINAGE SYSTEM. THIS INCLUDE CONSTRUCTING A DRAINAGE BYPASS SYSTEM TO PROVIDE CONVEYANCE OF OFF-SITE FLOWS THAT CURRENTLY DRAIN WEST THROUGH THE PROPERTY FROM THE SURROUNDING DRAINAGE BASIN AND WILLOUGHBY BLVD TO THE EAST. THE PROPOSED SYSTEM WILL ALSO EXPAND AN EXISTING FDOT LAKE ON-SITE THAT CURRENTLY SERVES KANNER HWY. THE EXPANDED LAKE WILL CONTINUE TO SERVE KANNER HWY IN ADDITION TO THE ON-SITE DEVELOPMENT. THE DEVELOPER SHALL FILE ALL REQUIRED PERMITS AND AGREEMENTS TO CONSTRUCT OR MODIFY THE PROPOSED INFRASTRUCTURE CURRENTLY SERVING OFF-SITE AREAS. **THE PROJECT WILL REQUIRE A MODIFICATION TO EXISTING SFWMD ERP CONCEPTUAL PERMIT 43-103195-P**

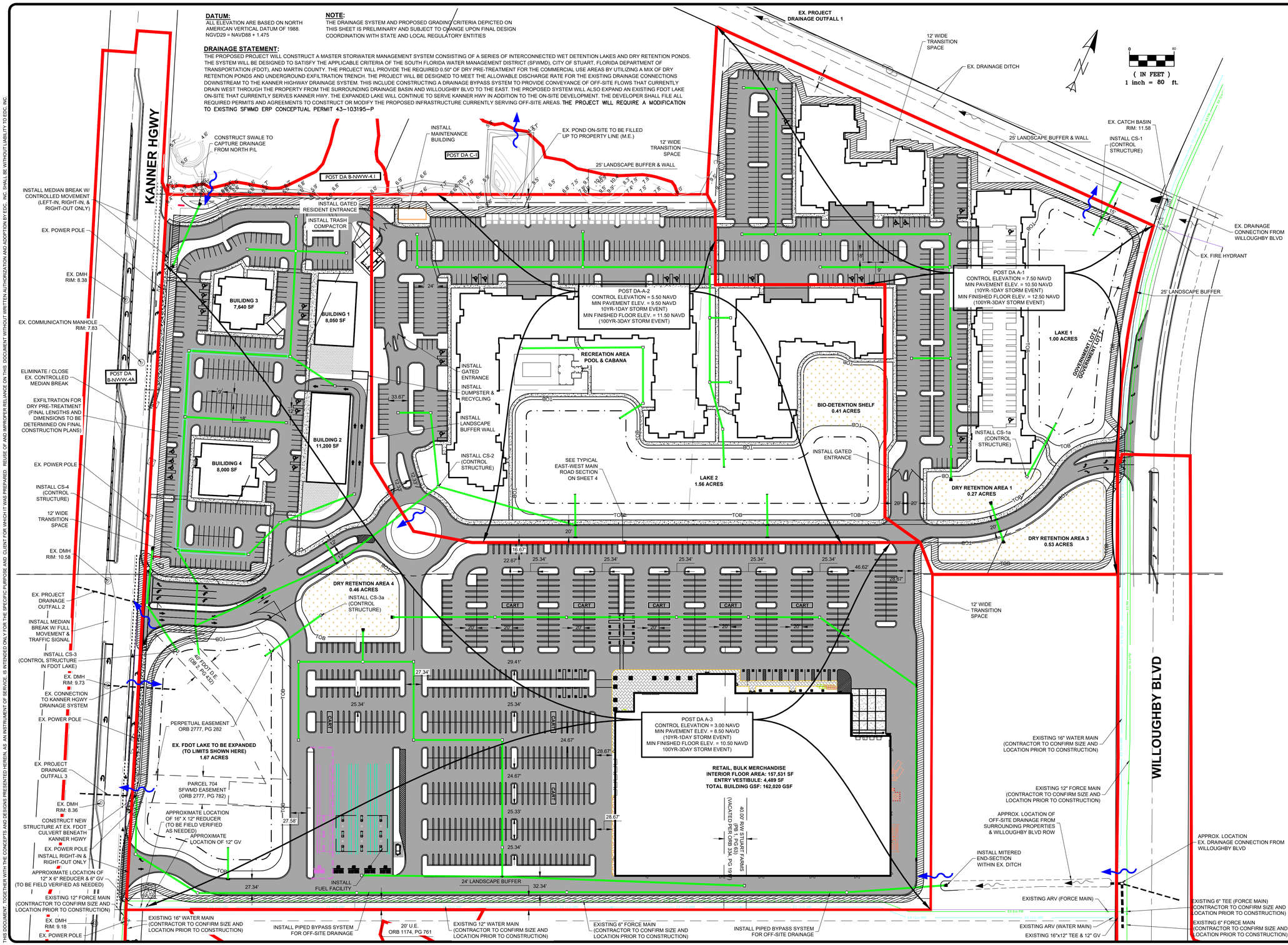

ENGINEERS & SURVEYORS ENVIRONMENTAL
10250 VILLAGE PARKWAY
SUITE 201
PORT ST. LUCIE, FL 34987
772-462-2455
www.edc-inc.com
F.B.P.E. CERTIFICATE OF AUTHORIZATION 9935
L.B. CERTIFICATE OF AUTHORIZATION 8098

DESIGNED BY	DCB
DRAWN BY	JLW
FILENAME	20-313 preliminary eng r1.dwg
LAYOUT	Overall PGD
SCALE	AS SHOWN
DATE	04/MAR/21

REVISION COMMENTS

DATE

KANNER CPUD

OVERALL PAVING, GRADING, & DRAINAGE PLAN

STUART FLORIDA

DAVID C. BAGGETT, P.E.(DATE)
#81375
10250 SW VILLAGE PARKWAY - SUITE 201
PORT SAINT LUCIE, FL 34987
772-462-2455

20-313

THIS DOCUMENT, TOGETHER WITH THE CONCEPTS AND DESIGNS PRESENTED HEREIN, AS AN INSTRUMENT OF SERVICE, IS INTENDED ONLY FOR THE SPECIFIC PURPOSE AND CLIENT FOR WHICH IT WAS PREPARED. REUSE OF AND IMPROPER RELIANCE ON THIS DOCUMENT WITHOUT WRITTEN AUTHORIZATION AND ADOPTION BY EDC, INC. SHALL BE WITHOUT LIABILITY TO EDC, INC.

Z:\EDC-2020\20-313 - Costco Stuart - Kanner Highway\ENGINEERING\AutoCAD\DWG\20-313 Preliminary Eng R1.dwg, Overall PGD, 3/19/2021 8:49:36 AM, Jessica, EDC, Inc.

DATUM:
ALL ELEVATION ARE BASED ON NORTH AMERICAN VERTICAL DATUM OF 1988.
NGVD29 = NAVD88 + 1.475

UTILITY STATEMENT:
WATER, SEWER, AND FIRE PROTECTION SERVICE WILL BE PROVIDED BY THE CITY OF STUART UTILITIES DEPARTMENT VIA CONNECTIONS TO EXISTING MAINS LOCATED ON THE SOUTHERN AND EASTERN PROPERTY BOUNDARIES. THE PROPOSED PROJECT WILL CONSTRUCT ON-SITE UTILITY INFRASTRUCTURE THROUGHOUT THE PUD TO SERVE THE MULTIPLE USES WITHIN THE DEVELOPMENT. ALL UTILITY DESIGN AND CONSTRUCTION WILL BE IN CONFORMANCE WITH THE LATEST STANDARDS OF THE CITY OF STUART AND THE FLORIDA DEPARTMENT OF ENVIRONMENTAL PROTECITON (FDEP). THE ON-SITE UTILITY SYSTEM FOR WATER, SEWER, AND FIRE PROTECTION WILL BE PRIVATELY OWNED, OPERATED, AND MAINTAINED BY THE DEVELOPER OR A DESIGNATED PROPERTY OWNERS ASSOCIATION UPON PROPER LEGAL ESTABLISHMENT. THE PRIVATE ON-SITE UTILITY INFRASTURCTURE WILL CONSIST OF A GRAVITY SEWER SYSTEM, SEWER AND WATER SERVICES TO THE BUILDINGS, GREASE TRAPS (WHERE REQUIRED), A PRIVATE FIRE PROTECTION MAIN, AND THE ASSOCIATED APPURTENANCES. ALL POINTS OF SERVICE FOR WATER AND SEWER SHALL BE LOCATED WITHIN AN EXISTING RIGHT-OF-WAY OR CITY OF STUART UTILITY EASEMENT. THE ONLY PUBLIC UTILITY TO BE CONSTRUCTED ON-SITE SHALL BE A NEW CITY OF STUART WASTEWATER LIFT STATION. THE LIFT STATION WILL BE DESIGNED TO SERVE THE ENTIRE PUD AND SHALL BE CONSTRUCTED ADJACENT TO THE KANNER HIGHWAY RIGHT-OF-WAY AS SHOWN ON THE SITE PLAN. THE DEVLEOPER SHALL EXTEND AN EXISTING CITY OF STUART WATER MAIN ACROSS THE PROPERTY FRONTAGE ON KANNER HIGHWAY. THE PROPOSED GRAVITY SEWER WILL COLLECT WASTEWATER FROM THE VARIOUS USES AND CONVEY IT TO THE PROPOSED CITY OF STUART LIFT STATION. THE LIFT STATION WILL DISCHARGE TO AN EXISTING CITY OF STUART FORCE MAIN LOCATED AT THE SOUTHERN PROPERTY BOUNDARY. A PRIVATE FIRE PROTECTION MAIN SHALL BE CONSTRUCTED THROUGH THE PUD WITH CONNECTIONS TO BUILDINGS SPRINKLER SYSTEMS, HYDRANTS, AND FIRE DEPARTMENT CONNECTIONS (FDC'S). THE DEVELOPER SHALL FILE ALL REQUIRED PERMITS AND AGREEMENTS PRIOR TO CONSTRUCTING OR MODIFYING ANY PORTION OF UTILITY INFRASTRUCTURE ASSOCIATED WITH THE APPROVED SITE PLAN. THE DEVELOPMENT WILL RECIEVE ELECTRICAL AND COMMUNICATION SERVICE FROM LOCAL PROVIDER SYSTEMS THAT EXIST ON KANNER HIGHWAY AND WILLOUGHBY BOULEVARD. PRIOR TO CONSTRUCTION COMPLETION THE DEVELOPER SHALL PROVIDE EASEMENTS FOR ON-SITE PRIVATE ELECTRICAL AND COMMUNICATION UTILITIES WHERE REQUIRED.

NOTE:
THE "UTILITY" SYSTEM LAYOUT DEPICTED ON THIS SHEET IS PRELIMINARY AND SUBJECT TO CHANGE UPON FINAL DESIGN COORDINATION WITH STATE AND LOCAL REGULATORY ENTITIES

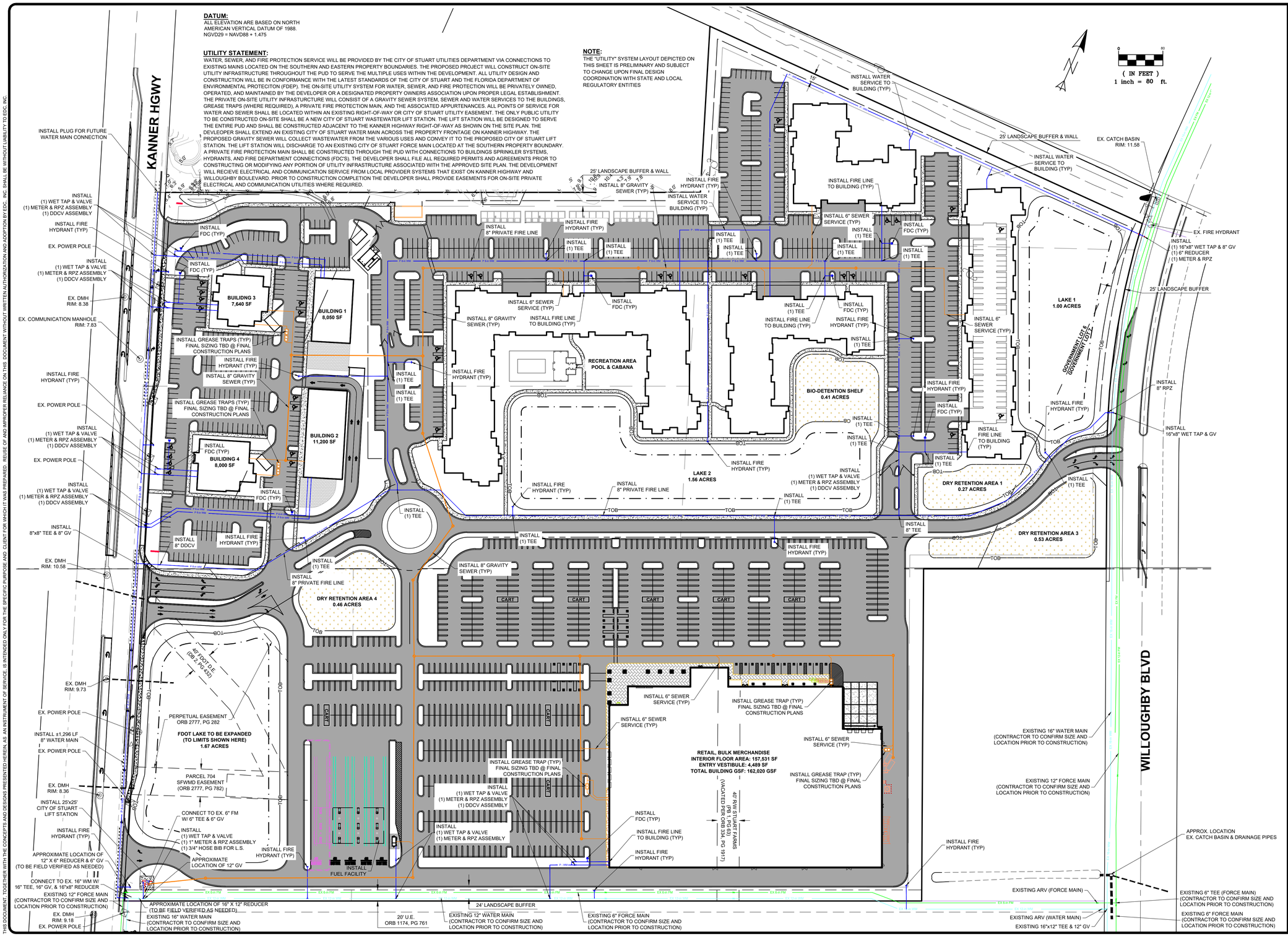

ENGINEERS ◆ SURVEYORS ENVIRONMENTAL
10250 VILLAGE PARKWAY
SUITE 201
PORT ST. LUCIE, FL 34987
☎ 772-462-2455
www.edc-inc.com
F.B.P.E. CERTIFICATE OF AUTHORIZATION 9935
L.B. CERTIFICATE OF AUTHORIZATION 8098

DESIGNED BY	DCB
DRAWN BY	JLW
FILENAME	20-313 preliminary eng r1.dwg
LAYOUT	Overall Utility
SCALE	AS SHOWN
DATE	04/MARCH

REVISION COMMENTS | DATE

KANNER CPUD
OVERALL UTILITY PLAN
STUART FLORIDA

DAVID C. BAGGETT, P.E.(DATE)
#81375
10250 SW VILLAGE PARKWAY - SUITE 201
PORT SAINT LUCIE, FL 34987
☎ 772-462-2455

20-313

THIS DOCUMENT, TOGETHER WITH THE CONCEPTS AND DESIGNS PRESENTED HEREIN, AS AN INSTRUMENT OF SERVICE, IS INTENDED ONLY FOR THE SPECIFIC PURPOSE AND CLIENT FOR WHICH IT WAS PREPARED. REUSE OF AND IMPROPER RELIANCE ON THIS DOCUMENT WITHOUT WRITTEN AUTHORIZATION AND ADOPTION BY EDC, INC. SHALL BE WITHOUT LIABILITY TO EDC, INC.

Z:\EDC-2020\20-313 - Costco Stuart - Kanner Highway\ENGINEERING\AutoCAD\DWG\20-313 Preliminary Eng R1.dwg, Overall Utility, 3/19/2021 8:49:41 AM, Jessica, EDC, Inc.

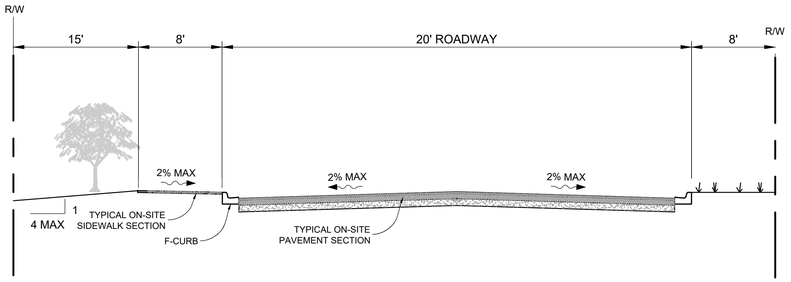

TYPICAL EAST-WEST MAIN ROAD SECTION

NOT TO SCALE

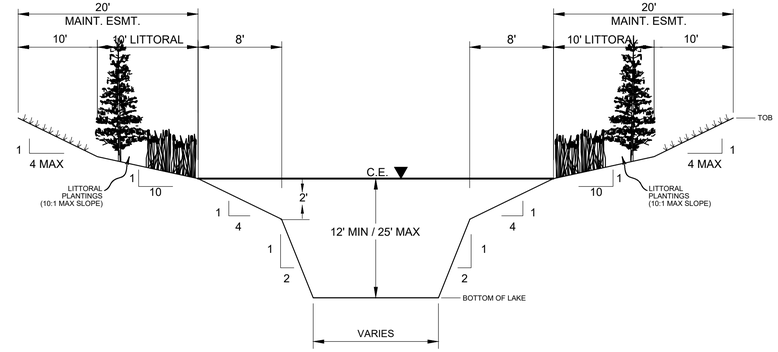

TYPICAL LAKE SECTION

*NOTE: LAKES TO BE EXCAVATED TO A MINIMUM OF 12' BELOW CONTROL ELEVATION UNLESS THE BORING LOGS REVEAL EXCEPTIONAL MATERIAL AND LAKE SIZE ALLOWS FOR DEEPER MATERIAL.

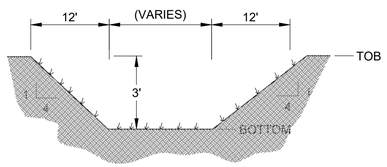

TYPICAL DRY RETENTION SECTION

*NOTE: SOD ALL DISTURBED AREAS

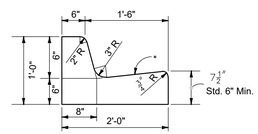

*NOTE: WHEN USED ON HIGH SIDE OF ROADWAYS, THE CROSS SLOPE OF THE GUTTER SHALL MATCH THE CROSS SLOPE OF THE ADJACENT PAVEMENT THE THICKNESS OF THE LIP SHALL BE 6", UNLESS OTHERWISE SHOWN ON PLANS.

TYPE "F" CURB DETAIL

NOT TO SCALE

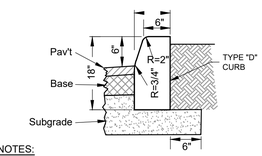

NOTES:

1. Use 3,000 P.S.I. concrete at 28 days for construction.
2. Subgrade to extend an additional 6" beyond Type "D" Curb.
3. Type "D" Curb to be constructed in accordance with FDOT Standard plans 520-001.

TYPE "D" CURB

NOT TO SCALE

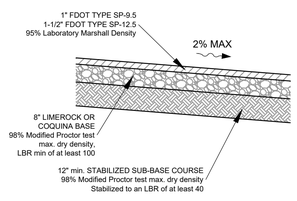

TYPICAL ON-SITE PAVEMENT SECTION

NOT TO SCALE

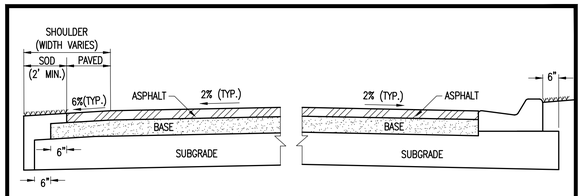

~~LOCAL RESIDENTIAL (SN-3.0 MIN.)~~

~~MIN. E.O.P. ELEVATION PEAK STAGE OF 10-YR / 24-HR STORM EVENT~~

- ~~SURFACE COURSE: 1.5" TYPE SP-9.5 ASPHALTIC CONCRETE ASPHALT MIX TO CONTAIN NO MORE THAN 30% RECLAIMED ASPHALT PAVEMENT (R.A.P.)~~
- ~~BASE COURSE: OPTIONAL BASE GROUP 6 PER FDOT INDEX 514~~
- ~~SUBGRADE: 12" COMPACTED OR STABLIZED SUBGRADE (LBR-40)~~

~~COLLECTOR & LOCAL COMMERCIAL/INDUSTRIAL (SN-3.5 MIN.)~~

~~MIN. E.O.P. ELEVATION PEAK STAGE OF 10-YR / 24-HR STORM EVENT (MINOR)~~

~~MIN. E.O.P. ELEVATION PEAK STAGE OF 25-YR / 24-HR STORM EVENT (MAJOR)~~

- ~~SURFACE COURSE 1½" TYPE SP-12.5 ASPHALTIC CONCRETE (1ST LIFT) 1" TYPE SP-9.5 ASPHALTIC CONCRETE (2ND LIFT) ASPHALT MIX TO CONTAIN NO MORE THAN 30% R.A.P.~~
- ~~BASE COURSE: OPTIONAL BASE GROUP 6 PER FDOT INDEX 514~~
- ~~SUBGRADE: 12" COMPACTED OR STABILIZED SUBGRADE (LBR-40)~~

ARTERIAL (SN-4.0 MIN.)

MIN. E.O.P. ELEVATION PEAK STAGE OF 25-YR / 72-HR STORM EVENT

- SURFACE COURSE 1½" TYPE S-I OR SP-12.5 ASPHALTIC CONCRETE (1ST LIFT)
  1½" TYPE SP-9.5 ASPHALTIC CONCRETE (2ND LIFT)
  ASPHALT MIX TO CONTAIN NO MORE THAN 30% R.A.P.
- BASE COURSE: OPTIONAL BASE GROUP 9 PER FDOT INDEX 514
- SUBGRADE: 12" COMPACTED OR STABILIZED SUBGRADE (LBR-40)

NOTES:

1. SHOULDER DESIGN:
   - SURFACE COURSE: SAME AS TRAVEL LANE SURFACE COURSE
   - BASE COURSE: OPTIONAL BASE GROUP 4 PER FDOT INDEX 514
2. STRUCTURAL NUMBER (SN) PER FDOT STANDARDS (REFER TO FDOT FLEXIBLE PAVEMENT DESIGN MANUAL).
3. SUBSTITUTIONS MAY BE APPROVED BY MARTIN COUNTY, PROVIDED MINIMUM SN IS DEMONSTRATED.
4. R.A.P. – RECLAIMED ASPHALT PAVEMENT REUSED IN NEW HOT MIX ASPHALT MIXES (30% MAX IN ALL MIX DESIGNS)

	MARTIN COUNTY ENGINEERING - STANDARD DETAILS	DETAIL R-10
	FLEXIBLE PAVEMENT SECTIONS	DATE: 12/20/16

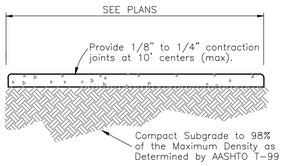

NOTES:

1. Use 3,000 P.S.I. Concrete At 28 Days for sidewalk construction.
2. Sidewalk thickness to be increased to 6" thick at driveway locations.
3. All repairs required during construction shall be removed and replaced 10' minimum to next full joint.
4. All sidewalk within FDOT right-of-way to be constructed per Standard plans 522-001.

4" THICK ON-SITE SIDEWALK DETAIL

NOT TO SCALE

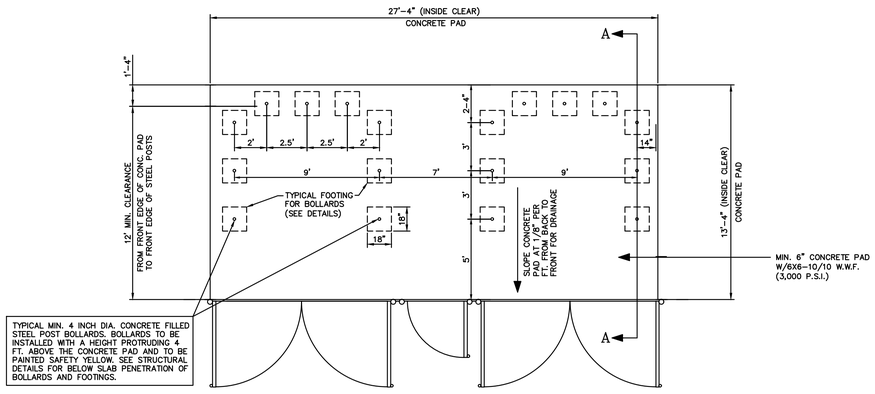

TYPICAL MIN. 4 INCH DIA. CONCRETE FILLED STEEL POST BOLLARDS. BOLLARDS TO BE INSTALLED WITH A HEIGHT PROTRUDING 4 FT. ABOVE THE CONCRETE PAD AND TO BE PAINTED SAFETY YELLOW. SEE STRUCTURAL DETAILS FOR BELOW SLAB PENETRATION OF BOLLARDS AND FOOTINGS.

CITY OF STUART DUMPSTER ENCLOSURE – STRUCTURAL PLAN

DOUBLE DUMPSTER w/ RECYCLING

N.T.S.

ENGINEERS ✪ SURVEYORS
ENVIRONMENTAL

10250 VILLAGE PARKWAY
SUITE 201
PORT ST. LUCIE, FL 34987
772-462-2455
www.edc-inc.com

F.B.P.E. CERTIFICATE OF AUTHORIZATION 9935
L.B. CERTIFICATE OF AUTHORIZATION 8098

DESIGNED BY	DCB
DRAWN BY	JLW
FILENAME	20-313 preliminary eng r1.dwg
LAYOUT	PGD Details
SCALE	AS SHOWN
DATE	04/MAR/21

DATE	REVISION COMMENTS

KANNER CPUD

PAVING, GRADING, & DRAINAGE DETAILS

STUART FLORIDA

DAVID C. BAGGETT, P.E.(DATE)
#81375

10250 SW VILLAGE PARKWAY - SUITE 201
PORT SAINT LUCIE, FL 34987
772-462-2455

20-313

THIS DOCUMENT, TOGETHER WITH THE CONCEPTS AND DESIGNS PRESENTED HEREIN, AS AN INSTRUMENT OF SERVICE, IS INTENDED ONLY FOR THE SPECIFIC PURPOSE AND CLIENT FOR WHICH IT WAS PREPARED. REUSE OF AND IMPROPER RELIANCE ON THIS DOCUMENT WITHOUT WRITTEN AUTHORIZATION AND ADOPTION BY EDC, INC. SHALL BE WITHOUT LIABILITY TO EDC, INC.

Z:\EDC-2020\20-313 - Costco Stuart - Kanner Highway\ENGINEERING\AutoCAD\DWG\20-313 Preliminary Eng R1.dwg, PGD Details, 3/19/2021 8:49:44 AM, Jessica, EDC, Inc.

THIS DOCUMENT, TOGETHER WITH THE CONCEPTS AND DESIGNS PRESENTED HEREIN, AS AN INSTRUMENT OF SERVICE, IS INTENDED ONLY FOR THE SPECIFIC PURPOSE AND CLIENT FOR WHICH IT WAS PREPARED. REUSE OF AND IMPROPER RELIANCE ON THIS DOCUMENT WITHOUT WRITTEN AUTHORIZATION AND ADOPTION BY EDC, INC. SHALL BE WITHOUT LIABILITY TO EDC, INC.

Z:\EDC-2020\20-313 - Costco Stuart - Kanner Highway\ENGINEERING\AutoCAD\DWG\20-313 Preliminary Eng R1.dwg, Utility Details, 3/19/2021 8:49:49 AM, Jessica, EDC, Inc.

CITY OF STUART
WATER DISTRIBUTION NOTES

1. ALL CONSTRUCTION MATERIAL, INSTALLATION AND TESTING SHALL CONFORM TO THE STANDARD SPECIFICATIONS OF THE CITY OF STUART.
2. WATER MAIN WHERE SPECIFIED AS POLYVINYL CHLORIDE (PVC) SHALL CONFORM TO AWWA C-900 OR C-905, PRESSURE CLASS 150 OR 235, DR (18).
3. MIN. CLASS 50 WATER MAIN, WHERE SPECIFIED AS DUCTILE IRON PIPE , SHALL CONFORM TO ANSI/AWWA C-150/A-21.50 OR ANSI/AWWA C-151/A-21.51 AND SHALL BE PRESSURE CLASS 350 (MINIMUM).
4. POLYVINYL CHLORIDE WATER MAIN SHALL BE BLUE IN COLOR. ALL PIPE REQUIRE THHN TRACER WIRE.
5. FITTINGS SHALL BE CAST OR DUCTILE IRON, CONFORMING TO AWWA C-110 AND ANSI A21.11, CLASS 250 MINIMUM, CEMENT LINED, AND SEAL COATED.
6. GATE VALVES SHALL BE RESILIENT WEDGE SEAT, VALVES SHALL CONFORM TO AWWA C-509 AS WELL AS THE CITY OF STUART'S PRODUCT LIST.
7. WATER LINES SHALL BE BACKFILLED AND COMPACTED IN ACCORDANCE WITH THE CITY OF STUART'S DESIGN AND CONSTRUCTION STANDARDS. THE CONTRACTOR SHALL SUBMIT CERTIFIED DENSITY TESTS AS REQUIRED BY THE CITY AND THE COUNTY/FDOT. IN CASES WHERE AREAS FALL WITHIN THE JURISDICTION OF LOCAL OR STATE AGENCIES, THE COMPACTION REQUIREMENTS SHALL NOT BE LESS THAN THE MINIMUM REQUIRED BY THE APPROPRIATE RESPONSIBLE AGENCY.
8. NO FIELD CHANGES OR DEVIATIONS FROM THE DESIGN SHALL BE MADE WITHOUT PRIOR APPROVAL OF THE ENGINEER AND CITY/COUNTY/FDOT.
9. THE CONTRACTOR SHALL NOTIFY THE ENGINEER, CITY OF STUART AND COUNTY/FDOT 48 HOURS PRIOR TO COMMENCING CONSTRUCTION.
10. A PRE-CONSTRUCTION CONFERENCE BETWEEN THE ENGINEER, THE CONTRACTOR, THE CITY, COUNTY/FDOT AND ANY OTHER APPLICABLE AGENCIES SHALL BE MANDATORY PRIOR TO COMMENCEMENT OF CONSTRUCTION.
11. TRAFFIC CONTROL, BARRICADES, ETC., SHALL BE IN ACCORDANCE WITH THE FLORIDA DEPARTMENT OF OF TRANSPORTATION STANDARDS AND APPROVED BY THE CITY ENGINEER.
12. MINIMUM COVER SHALL BE 36 INCHES EXCEPT AS APPROVED BY THE ENGINEER AND CITY/COUNTY/FDOT.
13. DISTURBED AREAS SHALL BE RESTORED IN CONFORMANCE WITH THE APPLICABLE GOVERNING AGENCY REQUIREMENTS.
14. EXISTING UTILITIES AND DRAINAGE SHALL BE FIELD VERIFIED PRIOR TO CONSTRUCTION AND PROTECTED BY THE CONTRACTOR.
15. WATER MAINS SHALL BE TESTED AND DISINFECTED IN ACCORDANCE WITH THE APPLICABLE FLORIDA DEPARTMENT OF ENVIRONMENTAL PROTECTION AND AWWA C-601 FOR DISINFECTION.

STANDARD UTILITY DETAILS
City of Stuart Public Works Department
121 S.W. Flagler Avenue, Stuart, Florida 34994
(772) 288-5300

WATER DISTRIBUTION NOTES
DATE: OCTOBER, 2016
FILE NAME: 2016 COS Std Details.dwg
SHEET NUMBER 1

CITY OF STUART
WATER DISTRIBUTION NOTES
CONTINUED

16. THE CONTRACTOR SHALL BE RESPONSIBLE FOR MAINTAINING EXISTING UTILITIES AND DRAINAGE.
17. THE CONTRACTOR SHALL FURNISH RECORD DRAWING INFORMATION TO THE ENGINEER INCLUDING LOCATIONS OF VALVES, FITTINGS, SERVICE CONNECTIONS, BLOWOFFS, AIR RELEASE VALVES, AND ANY OTHER PERTINENT INFORMATION NECESSARY TO LOCATE ITEMS CONSTRUCTED UNDER THIS PROJECT, AS REQUIRED BY THE UTILITIES ENGINEER.
18. THE CONTRACTOR SHALL TAP EXISTING LINES UNDER THE SUPERVISION OF THE CITY OF STUART ONLY AFTER TESTING AND DISINFECTION HAS BEEN COMPLETED AND APPROVED ON THE TAPPING SLEEVE AND VALVE.
19. SAMPLE POINT TAPS SHALL BE PLACED APPROXIMATELY THREE FEET AWAY FROM GATE VALVES, AS SHOWN, FOR TESTING. FOLLOWING TESTING AND STERILIZATION OF WATER LINES. CONTRACTOR SHALL PLACE A BRASS PLUG IN CORPORATION STOPS AND CURB STOPS SHALL BE REMOVED FROM TESTING LOCATIONS.
20. MECHANICAL RESTRAINTS TO BE USED ON ALL FITTINGS AND PLACED IN ACCORDANCE WITH THE MANUFACTURER'S RECOMMENDATIONS AND CITY OF STUART REQUIREMENTS, MORE STRINGENT SHALL APPLY.
21. ALL MAINS SHALL BE TESTED AT A MINIMUM OF 150 PSI. TESTING METHODS SHALL CONFORM TO AWWA C-600.

$$L = \frac{SD(P)^{1/2}}{133{,}200}$$ OR CURRENT AWWA STANDARD

L= LEAKAGE IN GPH
S= LENGTH OF PIPE IN FEET
D= PIPE DIAMETER IN INCHES
P= TESTING PRESSURE IN PSI

22. PRIOR TO ANY TESTING, ALL MAINS 3" IN DIA. AND LARGER SHALL HAVE A LINE SIZE SWAB PASSED THRU THE ENTIRE LENGTH OF THE LINE. NOTE: SWAB SHOULD BE PLACED IN 1st. JOINT OF NEW LINE. END OF MAIN SHOULD BE "TURNED UP" AT 45% AND EXTENDED SO THAT SWABBING AND A FULL BORE FLUSH CAN BE ACCOMPLISHED. BLOW-OFF ASSY CAN THEN BE PLACED. WHERE LINES BRANCH, SWABS WILL BE PLACED IN BRANCH LINES AND SEQUENTIALLY SWABBED AND FLUSHED.
23. TEN FEET MINIMUM HORIZONTAL AND 12 INCHES MINIMUM VERTICAL SEPARATION SHALL BE MAINTAINED BETWEEN THE WATER MAIN AND ANY WASTWATER LINES. THE DISTANCE SHALL BE MEASURED FROM OUTSIDE OF PIPE TO OUTSIDE OF PIPE OR STRUCTURE. WHERE THIS MINIMUM SEPARATION CANNOT BE MAINTAINED, THE CROSSING SHALL BE ARRANGED SO THAT THE WASTEWATER PIPE JOINTS AND THE WATER MAIN PIPE JOINTS ARE EQUIDISTANT FROM THE POINT OF CROSSING, AND THE WATER MAIN SHALL BE CONSTRUCTED OF DUCTILE IRON PIPE (DIP) AT THE CROSSING. SUFFICIENT LENGTHS OF DIP MUST BE USED TO PROVIDE A MINIMUM SEPARATION OF 10 FEET BETWEEN ANY TWO JOINTS. ALL JOINTS ON THE WATER MAIN WITHIN 20 FEET OF THE CROSSING MUST BE MECHANICALLY RESTRAINED. A MINIMUM VERTICAL CLEARANCE OF 6 INCHES MUST BE MAINTAINED AT ALL CROSSINGS.
24. WHERE A WATER MAIN IS TO BE INSTALLED BELOW A STORM DRAIN PIPE, A MINIMUM OF 6 INCHES OF VERTICAL CLEARANCE BETWEEN PIPES SHALL BE CONSTRUCTED OF DIP AT THE CROSSING, AND SHALL BE MECHANICALLY RESTRAINED WITHIN 20 FEET OF THE CROSSING.
25. CONTRACTOR SHALL COMPLY WITH FLORIDA TRENCH SAFETY ACT REQUIREMENTS.

STANDARD UTILITY DETAILS
City of Stuart Public Works Department
121 S.W. Flagler Avenue, Stuart, Florida 34994
(772) 288-5300

WATER DISTRIBUTION NOTES
DATE: OCTOBER, 2016
FILE NAME: 2016 COS Std Details.dwg
SHEET NUMBER 2

CITY OF STUART
WASTEWATER CONSTRUCTION NOTES

1. ALL CONSTRUCTION MATERIAL, INSTALLATION AND TESTING SHALL CONFORM TO THE STANDARD SPECIFICATIONS OF THE CITY OF STUART.
2. GRAVITY SEWER MAIN SHALL BE POLYVINYL CHLORIDE SDR-26, GREEN IN COLOR,
3. THE MANHOLE BASE SHALL BE SET ON A FIRM, DRY AND STABLE OR COMPACTED BASE FOUNDATION. IF NECESSARY, THE CONTRACTOR SHALL UTILIZE ROCK TO PROVIDE A FIRM AND SUITABLE MANHOLE BASE FOUNDATION.
4. WASTEWATER LINES SHALL BE BACKFILLED AND COMPACTED IN ACCORDANCE WITH THE CITY OF STUART DESIGN AND CONSTRUCTION STANDARDS. THE CONTRACTOR SHALL SUBMIT CERTIFIED DENSITY TESTS AS REQUIRED BY THE CITY. IN CASES WHERE AREAS FALL WITHIN THE JURISDICTION OF LOCAL OR STATE AGENCIES, THE COMPACTION REQUIREMENTS SHALL NOT BE LESS THAN THE MINIMUM REQUIRED BY THE APPROPRIATE RESPONSIBLE AGENCY.
5. A 1% MINIMUM SLOPE SHALL BE MAINTAINED ON ALL SANITARY SERVICE LATERALS.
6. THE CONTRACTOR SHALL FURNISH RECORD DRAWING INFORMATION TO THE ENGINEER CONSISTING OF PIPE SIZES, LOCATION OF SERVICE TEE WYES, DIAMETER OF SERVICES, LOCATION OF ANY FITTINGS, FINAL RIM AND INVERT ELEVATION OF ALL MANHOLES AND ANY OTHER PERTINENT INFORMATION NECESSARY TO LOCATE ITEMS CONSTRUCTED UNDER THIS PROJECT.
7. MAINTAIN 10 FEET HORIZONTAL DISTANCE BETWEEN WATER MAINS AND SEWER MAINS AS A MINIMUM.
8. WASTEWATER FORCE MAINS, WASTEWATER COLLECTION LINES, AND STORM SEWERS SHOULD CROSS UNDER WATER MAINS WHENEVER POSSIBLE. A MINIMUM VERTICAL DISTANCE OF 12 INCHES BETWEEN THE INVERT OF THE UPPER PIPE AND THE CROWN OF THE LOWER PIPE SHALL BE PROVIDED WHENEVER POSSIBLE. WHERE THIS MINIMUM SEPARATION CANNOT BE MAINTAINED, THE CROSSING SHALL BE ARRANGED SO THAT THE WASTEWATER PIPE JOINTS AND THE WATER PIPE JOINTS ARE EQUIDISTANT FROM THE POINT OF CROSSING, AND THE WATER MAIN SHALL BE CONSTRUCTED OF DUCTILE IRON PIPE (DIP) AT THE CROSSING. SUFFICIENT LENGTHS OF DIP MUST BE USED TO PROVIDE A MINIMUM SEPARATION OF 10 FEET BETWEEN ANY TWO JOINTS. ALL JOINTS ON THE WATER MAIN WITHIN 20 FEET OF THE CROSSING MUST BE MECHANICALLY RESTRAINED. A MINIMUM VERTICAL CLEARANCE OF 6 INCHES MUST BE MAINTAINED AT ALL CROSSINGS.
9. A PRE-CONSTRUCTION CONFERENCE BETWEEN THE ENGINEER, THE CONTRACTOR, CITY OF STUART PUBLIC WORKS DEPARTMENT, COUNTY/FDOT AND ANY OTHER NECESSARY AGENCY SHALL BE MANDATORY PRIOR TO THE COMMENCEMENT OF CONSTRUCTION.
10. NO FIELD CHANGES OR DEVIATIONS FROM THE DESIGN SHALL BE MADE WITHOUT PRIOR APPROVAL FROM THE ENGINEER, CITY, OR COUNTY/FDOT.
11. TRAFFIC CONTROL, BARRICADES, ETC. SHALL BE IN ACCORDANCE WITH THE FLORIDA DEPARTMENT OF TRANSPORTATION STANDARDS.
12. CONTRACTOR SHALL NOTIFY THE CITY OF STUART 48 HOURS PRIOR TO COMMENCING CONSTRUCTION.
13. WASTEWATER FORCE MAIN SHALL BE POLYVINYL CHLORIDE CONFORMING TO AWWA C-900, AND SHALL BE CLASS 150, DR-18 (12" AND SMALLER), OR DR-21, AWWA C-905 (14" AND ABOVE).
14. WASTEWATER FORCE MAIN SHALL BE GREEN IN COLOR. WASTEWATER FORCE MAIN SHALL HAVE THHN WIRE & LOCATOR TAPE WITH "SEWER" MARKED ON TAPE.
15. FITTINGS SHALL BE CAST OR DUCTILE IRON, CONFORMING TO AWWA C-110 AND ANSI A21.11, CLASS 250 MINIMUM, CEMENT LINED, AND EPOXY COATED.
16. WASTEWATER FORCE MAIN SHALL BE MARKED BY THE USE OF CONTINUOUS COPPER WIRE (GREEN IN COLOR) PERMANENTLY ATTACHED TO THE TOP OF THE FORCE MAIN.
17. MINIMUM COVER SHALL BE 48 INCHES, PIPES WITH LESS COVER REQUIRE PRIOR APPROVAL OF THE ENGINEER AND CITY OF STUART AND SHALL BE CONSTRUCTED OF DUCTILE IRON PIPE.
18. ALL MANHOLES SHALL HAVE SEWER RAIN GUARDS INSTALLED.
19. THE CONTRACTOR SHALL COMPLY WITH THE FLORIDA TRENCH SAFETY ACT REQUIREMENTS.
20. PRIOR TO ANY TESTING, ALL MAINS 3" IN DIA. AND LARGER SHALL HAVE A LINE SIZE SWAB PASSED THRU THE ENTIRE LENGTH OF THE LINE. NOTE: SWAB SHOULD BE PLACED IN 1st. JOINT OF NEW LINE. END OF MAIN SHOULD BE "TURNED UP" AT 45% AND EXTENDED SO THAT SWABBING AND A FULL BORE FLUSH CAN BE ACCOMPLISHED. BLOW-OFF ASSY CAN THEN BE PLACED. WHERE LINES BRANCH, SWABS WILL BE PLACED IN BRANCH LINES AND SEQUENTIALLY SWABBED AND FLUSHED.

STANDARD UTILITY DETAILS
City of Stuart Public Works Department
121 S.W. Flagler Avenue, Stuart, Florida 34994
(772) 288-5300

WASTEWATER CONSTRUCTION NOTES
DATE: OCTOBER, 2016
FILE NAME: 2016 COS Std Details.dwg
SHEET NUMBER 3

STANDARD SEPARATION STATEMENT FOR WATER / SEWER CONFLICTS

1. SANITARY SEWER, FORCE MAINS, AND STORM SEWERS SHOULD CROSS UNDER WATER MAINS WHENEVER POSSIBLE. SANITARY SEWERS, FORCE MAINS AND STORM SEWERS CROSSING WATER MAINS SHALL BE LAID TO PROVIDE A MINIMUM VERTICAL DISTANCE OF 18 INCHES BETWEEN THE INVERT OF THE UPPER PIPE AND THE CROWN OF THE LOWER PIPE WHENEVER POSSIBLE.

   WHERE SANITARY SEWER, FORCE MAINS, STORM SEWERS MUST CROSS A WATER MAIN LESS THAN 18 INCHES VERTICAL DISTANCE, BOTH THE SEWER AND WATER MAIN SHALL BE CONSTRUCTED OF DUCTILE IRON PIPE (DIP) AT THE CROSSING. (DIP IS NOT REQUIRED FOR STORM SEWERS.) SUFFICIENT LENGTHS OF DIP MUST BE USED TO PROVIDE A MINIMUM SEPARATION OF 10 FEET BETWEEN TWO JOINTS. ALL JOINTS ON THE WATER MAIN WITHIN 20 FEET OF THE CROSSING MUST BE MECHANICALLY RESTRAINED. A MINIMUM VERTICAL CLEARENCE OF 6 INCHES MUST BE MAINT-AINED AT ALL CROSSINGS.

   ALL CROSSINGS SHALL BE ARRANGED SO THAT THE SEWER PIPE JOINTS AND WATER MAIN PIPE JOINTS ARE EQUIDISTANT FROM THE POINT OF CROSSING (PIPES CENTERED ON THE CROSSING).

   WHERE A NEW PIPE CONFLICTS WITH AN EXISTING PIPE WITH LESS THAN 18 INCHES VERTICAL CLEARANCE, THE NEW PIPE SHALL BE CONSTRUCTED OF DIP (EXCEPT STORM SEWERS) AND NEW PIPES SHALL BE ARRANGED TO MEET THE CROSSING REQUIREMENTS ABOVE.
2. A MINIMUM 10-FOOT HORIZONTAL SEPARATION SHALL BE MAINT-AINED BETWEEN ANY TYPE OF SEWER AND WATER MAIN IN PARALLEL INSTALLATIONS WHENEVER POSSIBLE.

   IN CASES WHERE IT IS NOT POSSIBLE TO MAINTAIN A 10-FOOT HORIZONTAL SEPARATION, THE WATER MAIN MUST BE LAID IN A SEPARATE TRENCH OR ON A UNDISTURBED EARTH SHELF LOCATED ON ONE SIDE OF THE SEWER OR FORCE MAIN AT SUCH AN ELEVATION THAT THE BOTTOM OF THE WATER MAIN IS AT LEAST 18 INCHES ABOVE THE TOP OF THE SEWER.

   WHERE IT IS NOT POSSIBLE TO MAINTAIN A VERTICAL DISTANCE OF 18 INCHES IN PARALLEL INSTALLATIONS, THE WATER MAIN SHALL BE CONSTRUCTED OF DIP AND THE SEWER OR THE FORCE MAIN SHALL BE CONSTRUCTED OF DIP (EXCEPT STORM SEWER) WITH A MINIMUM VERTICAL DISTANCE OF 6 INCHES. THE WATER MAIN SHOULD ALWAYS BE ABOVE THE SEWER. JOINTS ON THE WATER MAIN SHALL BE LOCATED AS FAR APART AS POSSIBLE FROM JOINTS ON THE SEWER OR FORCE MAIN (STAGGERED JOINTS).
3. ALL DIP SHALL BE PRESSURE CLASS 350 MIN.. ADEQUATE PROTECTIVE MEASURES AGAINST CORROSION SHALL BE USED AS DETERMINED BY THE DESIGN ENGINEER.

STANDARD UTILITY DETAILS
City of Stuart Public Works Department
121 S.W. Flagler Avenue, Stuart, Florida 34994
(772) 288-5300

WATER and SEWER CONFLICT NOTES
DATE: OCTOBER, 2016
FILE NAME: 2016 COS Std Details.dwg
SHEET NUMBER 4

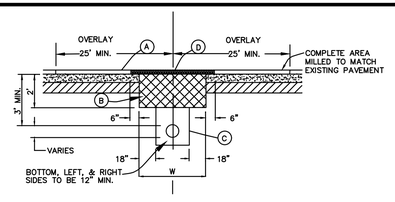

A. OVERLAY SHALL EXTEND 25' BEYOND TRENCH WALL ON BOTH SIDES OF ROAD CUT. MINIMUM TYPE S-III ASPHALT OR MATCH EXISTING SURFACE MATERIAL WHEN POSSIBLE.
B. CONSTRUCT 2.0' DEEP X WIDTH AND LENGTH OF TRENCH WITH CEMENTED COQUINA OR LIMEROCK. SEE SPECIFICATIONS #2 BELOW FOR COMPACTION REQUIREMENTS.
C. PROVIDE CLEAN BACKFILL. BACKFILL SHALL BE REPLACED IN 6" LAYERS. EACH LAYER SHALL BE MECHANICALLY COMPACTED TO A MINIMUM 98% DENSITY AS DETERMINED BY AASHTO T-180.
D. DITCH WIDTH (W)+12", MATCH EXISTING TYPE AND THICKNESS OF ASPHALT OR TYPE S-III.

NOTES:

1. REPLACED BASE MATERIAL OVER DITCH SHALL BE AS SHOWN ABOVE.
2. BASE MATERIAL SHALL BE PLACED IN 6" LAYERS OR AS OTHERWISE APPROVED AND EACH LAYER THOROUGHLY MECHANICALLY COMPACTED TO (98%) DENSITY AS DETERMINED BY AASHTO T-180.
3. FINAL ASPHALT CONCRETE PAVEMENT JOINTS SHALL BE MILLED TO MATCH EXISTING ASPHALT.
4. ALL PAVEMENT JOINTS SHALL BE MECHANICALLY SAWED 90 DEGREES.
5. SURFACE MATERIAL WILL BE CONSISTENT WITH EXISTING SURFACE OR AS OTHERWISE DIRECTED (TYPE S-III) AND PLACED IN ACCORDANCE WITH FDOT REQUIREMENTS.
6. A MINIMUM OF TWO DENSITY TESTS SHALL BE TAKEN FOR EACH SIX (6) INCH LIFT OF SUBGRADE AND EACH OPEN CUT CROSSING. WHEN THE SPECIFIED COMPACTED BASE IS GREATER THAN SIX AND ONE-HALF (6-1/2) INCHES THE BASE SHALL BE CONSTRUCTED IN TWO OR MORE COURSES. PROCTORS FOR MATERIALS USED IN BACK-FILLING SHALL BE OBTAINED BY A CERTIFIED LABORATORY. DENSITY TESTS SHALL BE CONDUCTED BY A CERTIFIED LABORATORY OR THE PERMITTEE'S CONSULTANTS. THE PERCENTAGE OF MAXIMUM DENSITY REQUIRED SHALL BE IN ACCORDANCE WITH THE LATEST EDITION OF THE FLORIDA DEPARTMENT OF TRANSPORTATION STANDARD SPECIFICATIONS. A COPY OF ALL COMPLETED AND ACCEPTED DENSITY TESTS SHALL BE FURNISHED TO THE PUBLIC WORKS DEPT. AND/OR THE ENGINEER OF RECORD.

CITY OF STUART PAVEMENT RESTORATION DETAIL
(ASPHALT)

STANDARD UTILITY DETAILS
City of Stuart Public Works Department
121 S.W. Flagler Avenue, Stuart, Florida 34994
(772) 288-5300

PAVEMENT RESTORATION DETAIL (ASPHALT)
DATE: OCTOBER, 2016
FILE NAME: 2016 COS Std Details.dwg
SHEET NUMBER 7

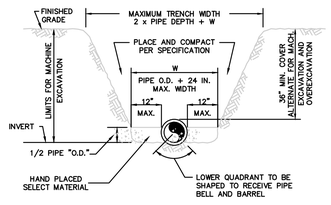

NOTES:

1. THE CONTRACTOR SHALL COMPLY WITH REQUIREMENTS OF THE FLORIDA TRENCH SAFETY ACT.
2. INITIAL BACKFILL SHALL BE HAND PLACED TO 12" ABOVE THE PIPE. BACKFILL SHALL BE MECHANICALLY TAMPED TO A MINIMUM OF 90% OF MAX. DENSITY AS DETERMINED BY AASHTO METHOD T-180.

TYPICAL TRENCH DETAIL

STANDARD UTILITY DETAILS
City of Stuart Public Works Department
121 S.W. Flagler Avenue, Stuart, Florida 34994
(772) 288-5300

TYPICAL TRENCH DETAIL
DATE: OCTOBER, 2016
FILE NAME: 2016 COS Std Details.dwg
SHEET NUMBER 9

ENGINEERS ◆ SURVEYORS
ENVIRONMENTAL
10250 VILLAGE PARKWAY
SUITE 201
PORT ST. LUCIE, FL 34987
☎ 772-462-2455
www.edc-inc.com
F.B.P.E. CERTIFICATE OF AUTHORIZATION 9935
L.B. CERTIFICATE OF AUTHORIZATION 8098

DESIGNED BY	DCB
DRAWN BY	JLW
FILENAME	20-313 preliminary eng r1.dwg
LAYOUT	Utility Details
SCALE	AS SHOWN
DATE	04/MAR/21

REVISION COMMENTS | DATE

KANNER CPUD
UTILITY DETAILS
STUART FLORIDA

DAVID C. BAGGETT, P.E.(DATE)
#81375
10250 SW VILLAGE PARKWAY - SUITE 201
PORT SAINT LUCIE, FL 34987
☎ 772-462-2455

20-313

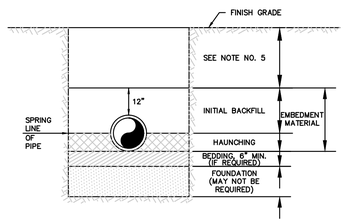

NOTES:

1. IN CERTAIN SOIL CONDITIONS A FOUNDATION MAY BE REQUIRED.
2. BEDDING IS REQUIRED PRIMARILY TO BRING THE TRENCH BOTTOM UP TO GRADE. BEDDING MATERIALS SHALL PROVIDE A UNIFORM AND ADEQUATE LONGITUDINAL SUPPORT UNDER THE PIPE.
3. HAUNCHING MATERIAL SHALL BE HAND PLACED TO THE SPRINGLINE OF THE PIPE. MATERIAL SHALL BE CONSOLIDATED UNDER THE PIPE AND HAND TAMPED TO PROVIDE ADEQUATE SIDE SUPPORT.
4. INITIAL BACKFILL MATERIAL SHALL BE HAND PLACED TO 12" ABOVE THE TOP OF PIPE AND BE COMPACTED USING A HAND OPERATING TAMPING DEVICE.
5. BACKFILL SHALL BE COMPACTED TO 98% OF MAX. DENSITY AS PER AASHTO T-180.
6. DENSITY TEST SHALL BE PREFORMED AT AREAS DETERMINED BY THE DESIGN ENGINEER OR PERMIT AGENCY HAVING JURISDICTION.

BACKFILLING REQUIREMENTS
OVER CITY OF STUART UTILITIES

STANDARD UTILITY DETAILS
City of Stuart Public Works Department
121 S.W. Flagler Avenue, Stuart, Florida 34994
(772) 288-5300

BACKFILLING REQUIREMENTS
DATE: OCTOBER, 2016
FILE NAME: 2016 COS Std Details.dwg
SHEET NUMBER 10

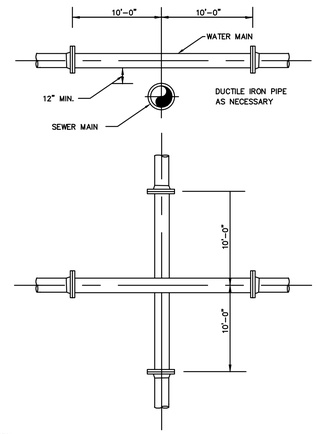

NOTES:
WATER MAIN CROSSING EXISTING FORCE MAIN SHALL BE LAID TO PROVIDE A MINIMUM VERTICAL DISTANCE OF 18 INCHES BETWEEN THE INVERT OF THE UPPER PIPE AND THE CROWN OF THE LOWER PIPE MUST BE USED TO PROVIDE A MINIMUM SEPARATION OF 10 FEET BETWEEN ANY TWO JOINTS. ALL CROSSINGS SHALL BE ARRANGED SO THAT THE SEWER PIPE JOINTS AND THE WATER MAIN PIPE JOINTS ARE EQUAL DISTANCE FROM THE POINT OF CROSSING (PIPES CENTERED ON THE CROSSING). IN ALL CASES A MIN. 18" VERTICAL SEPERATION SHALL BE REQUIRED.

UTILITY CROSSING DETAIL

STANDARD UTILITY DETAILS
City of Stuart Public Works Department
121 S.W. Flagler Avenue, Stuart, Florida 34994
(772) 288-5300

UTILITY CROSSING DETAIL
DATE: OCTOBER, 2016
FILE NAME: 2016 COS Std Details.dwg
SHEET NUMBER 15

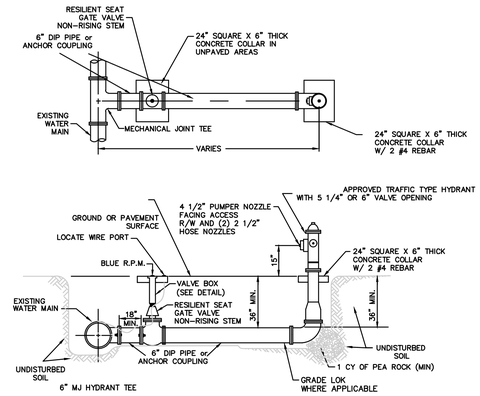

1. HYDRANT SHALL BE INSTALLED PLUMB & TRUE.
2. HYDRANT SHALL BE PAINTED FROM FACTORY.
3. HEEL TO REST IN UNDISTURBED SOIL.
4. HYDRANT ASSEMBLY MUST BE RESTRAINED TO TEE.
5. ALL FITTINGS TO BE MECHANICAL JOINT.
6. ENTIRE ASSEMBLY TO BE MECHANICALLY RESTRAINED.
7. ALL HYDRANTS ARE TO UTILIZE ANCHOR COUPLINGS, WHEN APPLICABLE.

TYPICAL FIRE HYDRANT ASSEMBLY

STANDARD UTILITY DETAILS
City of Stuart Public Works Department
121 S.W. Flagler Avenue, Stuart, Florida 34994
(772) 288-5300

TYPICAL FIRE HYDRANT ASSEMBLY
DATE: OCTOBER, 2016
FILE NAME: 2016 COS Std Details.dwg
SHEET NUMBER 25

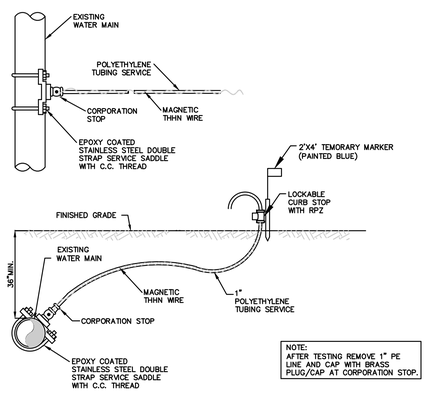

NOTE:
AFTER TESTING REMOVE 1" PE LINE AND CAP WITH BRASS PLUG/CAP AT CORPORATION STOP.

BACTERIOLOGICAL SAMPLING POINT DETAIL

NOTE: ADD LAMINATED SIGN NOTING THAT "TESTING IS IN PROGRESS – DO NOT DISTURB" WHILE SAMPLE POINT IS IN SERVICE.

STANDARD UTILITY DETAILS
City of Stuart Public Works Department
121 S.W. Flagler Avenue, Stuart, Florida 34994
(772) 288-5300

BACTERIOLOGICAL SAMPLING POINT DETAIL
DATE: OCTOBER, 2016
FILE NAME: 2016 COS Std Details.dwg
SHEET NUMBER 28

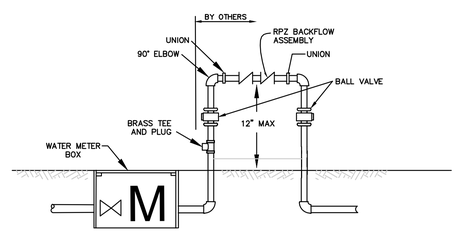

TYPICAL POTABLE / RECLAIMED WATER METER WITH BACKFLOW PREVENTER ASSEMBLY
5/8" X 3/4" & 1"
(COMMERCIAL / IRRIGATON)

BACKFLOW DEVICE MUST BE LANDSCAPED

NOTES
1. RECLAIMED WATER BACKFLOW PREVENTER ASSEMBLY MUST BE PAINTED PURPLE PANTONE 522.
2. METER TO BE SUPPLIED BY THE CITY OF STUART

STANDARD UTILITY DETAILS
City of Stuart Public Works Department
121 S.W. Flagler Avenue, Stuart, Florida 34994
(772) 288-5300

TYPICAL BACKFLOW PREVENTER ASSEMBLY
DATE: OCTOBER, 2016
FILE NAME: 2016 COS Std Details.dwg
SHEET NUMBER 29

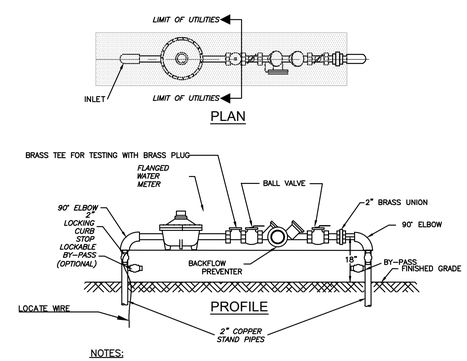

NOTES:

1. *LANDSCAPING REQUIRED PER CITY OF STUART ORDINANCE. NO PLANTS OR TREES WITHIN 18" AROUND METER OR BACKFLOW. NO SOLDER JOINTS. MUST BE SCREENED, NO GROW IN PERIOD.*
2. *ASSEMBLY TO BE 18" FROM FINISH GRADE TO CENTERLINE OF THE 90° BEND.*
3. *RECLAIMED WATER METER ASSEMBLY MUST BE PAINTED PANTONE PURPLE 522.*
4. *NO SOLDER JOINTS.*

1.5" & 2" POTABLE / RECLAIMED WATER METER & BACKFLOW PREVENTER ASSEMBLY SERVICE (COMMERCIAL)

STANDARD UTILITY DETAILS
City of Stuart Public Works Department
121 S.W. Flagler Avenue, Stuart, Florida 34994
(772) 288-5300

TYPICAL BACKFLOW PREVENTER ASSEMBLY
DATE: OCTOBER, 2016
FILE NAME: 2016 COS Std Details.dwg
SHEET NUMBER 30

ENGINEERS ✪ SURVEYORS
ENVIRONMENTAL
10250 VILLAGE PARKWAY
SUITE 201
PORT ST. LUCIE, FL 34987
☎ 772-462-2455
www.edc-inc.com
F.B.P.E. CERTIFICATE OF AUTHORIZATION 9935
L.B. CERTIFICATE OF AUTHORIZATION 8098

DESIGNED BY	DCB
DRAWN BY	JLW
FILENAME	20-313 preliminary eng r1.dwg
LAYOUT	Utility Details (2)
SCALE	AS SHOWN
DATE	04/MAR/21

REVISION COMMENTS
DATE

KANNER CPUD
UTILITY DETAILS
STUART FLORIDA

DAVID C. BAGGETT, P.E.(DATE)
#81375
10250 SW VILLAGE PARKWAY - SUITE 201
PORT SAINT LUCIE, FL 34987
☎ 772-462-2455

20-313

THIS DOCUMENT, TOGETHER WITH THE CONCEPTS AND DESIGNS PRESENTED HEREIN, AS AN INSTRUMENT OF SERVICE, IS INTENDED ONLY FOR THE SPECIFIC PURPOSE AND CLIENT FOR WHICH IT WAS PREPARED. REUSE OF AND IMPROPER RELIANCE ON THIS DOCUMENT WITHOUT WRITTEN AUTHORIZATION AND ADOPTION BY EDC, INC. SHALL BE WITHOUT LIABILITY TO EDC, INC.

Z:\EDC-2020\20-313 - Costco Stuart - Kanner Highway\ENGINEERING\AutoCAD\DWGs\20-313 Preliminary Eng R1.dwg, Utility Details (2), 3/19/2021 8:49:50 AM, Jessica, EDC, Inc.

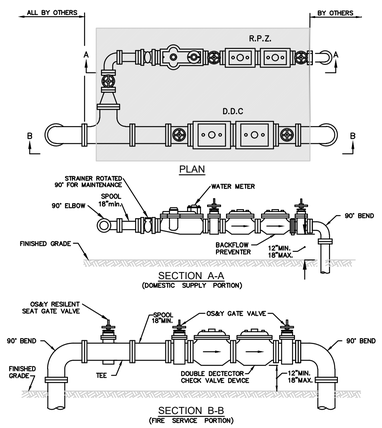

NOTES:

1. LANDSCAPING REQUIRED PER CITY OR COUNTY ORDINANCE. NO PLANTS OR TREES WITHIN 18" AROUND METER TO ALLOW MAINTENANCE WITHOUT DAMAGE TO PLANTS ETC.
2. NO SOLDER JOINTS.

WATER METER / BACKFLOW PREVENTER ASSEMBLY
- FIRE SERVICE w/ DOMESTIC SUPPLY

STANDARD UTILITY DETAILS
City of Stuart Public Works Department
121 S.W. Flagler Avenue, Stuart, Florida 34994
(772) 288-5300

WATER METER/BACKFLOW PREVENTER-FIRE SERVICE w/ DOMESTIC SUPPLY
DATE: OCTOBER, 2016
FILE NAME: 2016 COS Std Details.dwg
SHEET NUMBER 32

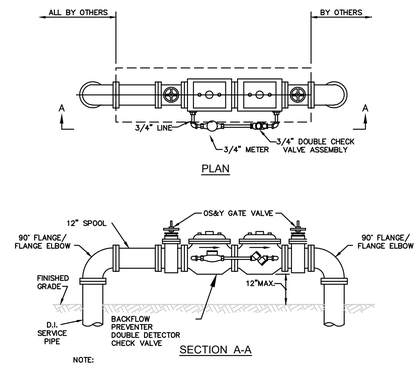

NOTE:

1. LANDSCAPING IS REQUIRED PER CITY OR COUNTY ORDINANCE. PLANTINGS MUST SCREEN AT PLANT HEIGHT,NO GROW IN PERIOD.

DOUBLE CHECK VALVE
w/ DETECTOR CHECK ASSEMBLY / FIRE SERVICE

STANDARD UTILITY DETAILS
City of Stuart Public Works Department
121 S.W. Flagler Avenue, Stuart, Florida 34994
(772) 288-5300

DOUBLE CHECK VALVE
w/ DETECTOR CHECK ASSEMBLY
DATE: OCTOBER, 2016
FILE NAME: 2016 COS Std Details.dwg
SHEET NUMBER 33

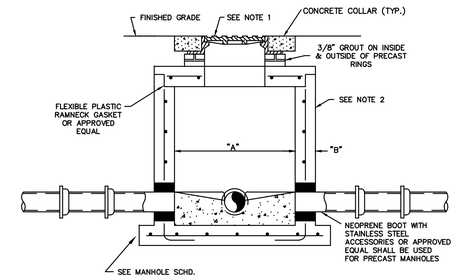

PIPE DIA.	"A"	"B"	BOT. SLAB "T"
8"-24"	4'-0"	8"	8"
30"-36"	5'-0"	8"	10"
42"-48"	6'-0"	8"	12"

TYPICAL MANHOLE DIMENSIONS

NOTES:

1. MANHOLE FRAME & COVER WITH THE WORDS " SANITARY SEWER" CAST IN THE COVER. U.S. FOUNDRY 170 OR APPROVED EQUAL.
2. ALL CONCRETE MANHOLES TO BE 4000 P.S.I. TO MEET OR EXCEED ASTM C478 ALL CEMENT TO BE TYPE II ACID RESISTANT. REINFORCING AREA OF 0.02 SQ. IN/FT FOR WALL SECTION MIN. TO MEET OR EXCEED ASTM A 185.
3. A MAXIMUM OF 2 LAYERS OF PRECAST CONCRETE RINGS, IF REQUIRED.
4. RAIN GUARDS SHALL BE INSTALLED IN MANHOLES.
5. ALL MANHOLES SHALL BE COATED INSIDE AND OUTSIDE W/ 8-10 MILS EACH OF 100% WATER BASED EPOXY.

SHALLOW MANHOLE
(DEPTH LESS THAN 5'-0")

STANDARD UTILITY DETAILS
City of Stuart Public Works Department
121 S.W. Flagler Avenue, Stuart, Florida 34994
(772) 288-5300

SHALLOW MANHOLE
(DEPTH LESS THAN 5'-0")
DATE: OCTOBER, 2016
FILE NAME: 2016 COS Std Details.dwg
SHEET NUMBER 36

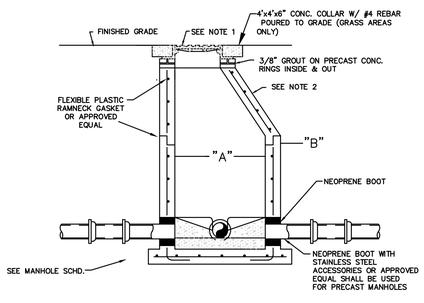

PIPE DIA.	"A"	"B"	BOT. SLAB "T"
8"-24"	4'-0"	8"	8"
30"-36"	5'-0"	8"	10"
42"-48"	6'-0"	8"	12"

TYPICAL MANHOLE DIMENSIONS

NOTES:

1. MANHOLE FRAME & COVER WITH THE WORDS " SANITARY SEWER" CAST IN THE COVER. U.S. FOUNDRY 170 OR APPROVED EQUAL.
2. ALL CONCRETE MANHOLES TO BE 4000 P.S.I. TO MEET OR EXCEED ASTM C478 ALL CEMENT TO BE TYPE II ACID RESISTANT. REINFORCING AREA OF 0.02 SQ. IN/FT FOR WALL SECTION MIN. TO MEET OR EXEED ASTM A 185.
3. A MAXIMUM OF 2 LAYERS OF PRECAST CONCRETE RINGS, IF REQUIRED.
4. RAINGUARDS SHALL BE INSTALLED IN MANHOLES.
5. ALL MANHOLES SHALL BE COATED INSIDE AND OUTSIDE W/ 8-10 MILS EACH OF 100% WATER BASED EPOXY

STANDARD MANHOLE

STANDARD UTILITY DETAILS
City of Stuart Public Works Department
121 S.W. Flagler Avenue, Stuart, Florida 34994
(772) 288-5300

STANDARD MANHOLE
DATE: OCTOBER, 2016
FILE NAME: 2016 COS Std Details.dwg
SHEET NUMBER 37

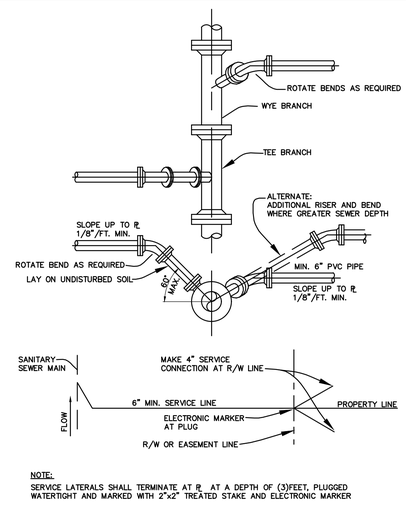

NOTE:
SERVICE LATERALS SHALL TERMINATE AT ℞ AT A DEPTH OF (3)FEET, PLUGGED WATERTIGHT AND MARKED WITH 2"x2" TREATED STAKE AND ELECTRONIC MARKER

SERVICE CONNECTION
(LATERAL)

STANDARD UTILITY DETAILS
City of Stuart Public Works Department
121 S.W. Flagler Avenue, Stuart, Florida 34994
(772) 288-5300

SERVICE CONNECTION (LATERAL)
DATE: OCTOBER, 2016
FILE NAME: 2016 COS Std Details.dwg
SHEET NUMBER 41

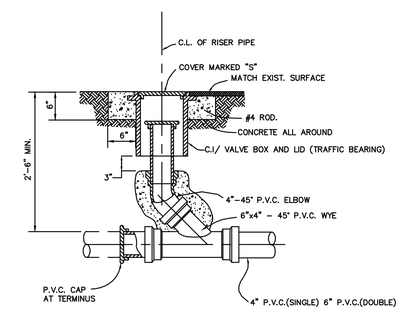

TERMINAL/ SERVICE LATERAL CLEANOUT DETAIL

STANDARD UTILITY DETAILS
City of Stuart Public Works Department
121 S.W. Flagler Avenue, Stuart, Florida 34994
(772) 288-5300

TERMINAL/SERVICE LATERAL CLEANOUT DETAIL
DATE: OCTOBER, 2016
FILE NAME: 2016 COS Std Details.dwg
SHEET NUMBER 43

ENGINEERS ✪ SURVEYORS
ENVIRONMENTAL
10250 VILLAGE PARKWAY
SUITE 201
PORT ST. LUCIE, FL 34987
☎ 772-462-2455
www.edc-inc.com
F.B.P.E. CERTIFICATE OF AUTHORIZATION 9935
L.B. CERTIFICATE OF AUTHORIZATION 8098

DCB DESIGNED BY
JLW DRAWN BY
20-313 preliminary eng r1.dwg FILENAME
Utility Details (3) LAYOUT
AS SHOWN SCALE
04/MAR/21 DATE

REVISION COMMENTS
DATE

KANNER CPUD
UTILITY DETAILS
STUART FLORIDA

DAVID C. BAGGETT, P.E.(DATE)
#81375
10250 SW VILLAGE PARKWAY - SUITE 201
PORT SAINT LUCIE, FL 34987
☎ 772-462-2455

20-313

THIS DOCUMENT TOGETHER WITH THE CONCEPTS AND DESIGNS PRESENTED HEREIN, AS AN INSTRUMENT OF SERVICE, IS INTENDED ONLY FOR THE SPECIFIC PURPOSE AND CLIENT FOR WHICH IT WAS PREPARED. REUSE OF AND IMPROPER RELIANCE ON THIS DOCUMENT WITHOUT WRITTEN AUTHORIZATION AND ADOPTION BY EDC, INC. SHALL BE WITHOUT LIABILITY TO EDC, INC.

Z:\EDC-2020\20-313 - Costco Stuart - Kanner Highway\ENGINEERING\AutoCAD\DWG\20-313 Preliminary Eng R1.dwg, Utility Details (3), 3/19/2021 8:49:51 AM, Jessica, EDC, Inc.

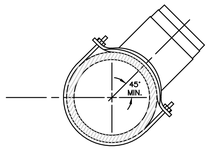

WASTEWATER SERVICE TAP DETAIL

STANDARD UTILITY DETAILS
City of Stuart Public Works Department
121 S.W. Flagler Avenue, Stuart, Florida 34994
(772) 288-5300

WASTEWATER SERVICE TAP DETAIL
DATE: OCTOBER, 2016
FILE NAME: 2016 COS Std Details.dwg
SHEET NUMBER 44

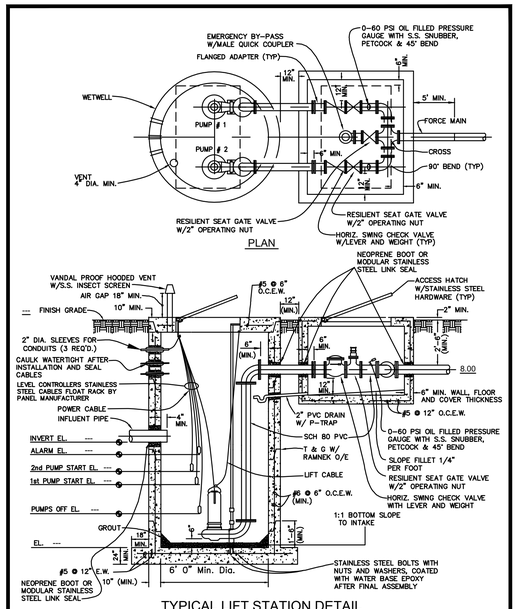

TYPICAL LIFT STATION DETAIL

STANDARD UTILITY DETAILS
City of Stuart Public Works Department
121 S.W. Flagler Avenue, Stuart, Florida 34994
(772) 288-5300

TYPICAL LIFT STATION DETAIL
DATE: OCTOBER, 2016
FILE NAME: 2016 COS Std Details.dwg
SHEET NUMBER 52

PUMP DATA:
MANUFACTURER, ---
MODEL No. --- IMP. No. --- MOTOR, --- HP,
--- RPM, --- VOLTS, --- PHASE, 60 HERTZ

OPERATING CONDITIONS:
--- GPM AT --- TDH. --- % EFFICIENCY

WET WELL:
SIZED FOR MINIMUM PUMP CYCLE TIME OF 10 MINUTES AND A MAXIMUM OF 6 PUMP STARTS PER HOUR. WORKING DEPTH --- FT. WORKING VOLUME --- GALS.

ELECTRICAL:
FEEDERS AND CONDUIT ____ MAIN SWITCH --- POLES --- AMPS

TYPICAL LIFT STATION DATA

STANDARD UTILITY DETAILS
City of Stuart Public Works Department
121 S.W. Flagler Avenue, Stuart, Florida 34994
(772) 288-5300

TYPICAL LIFT STATION DATA
DATE: OCTOBER, 2016
FILE NAME: 2016 COS Std Details.dwg
SHEET NUMBER 53

THIS DRAWING DEPICTS A GENERAL SITE PLAN ONLY. THE ENGINEER OF RECORD SHALL ORIENT THE COMPONENTS OF THE SYSTEM TO MEET SPECIFIC SITE PLAN CONDITIONS

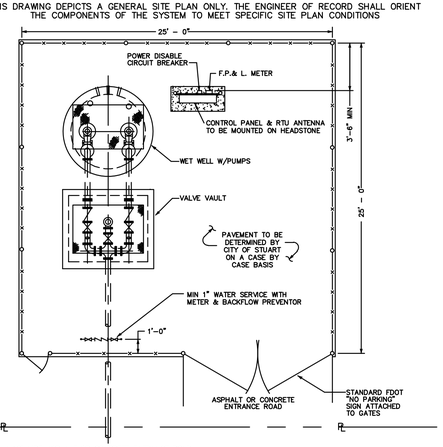

NOTES:
1. MINIMUM 12' WIDE ASPHALT OR CONCRETE ENTRANCE ROAD.
2. ENTRANCE ROAD TO BE EITHER CONCRETE OR ASPHALT AND CONFORM TO FDOT SPECIFICATIONS.
3. PROVIDE TWO (2) SIX FOOT WIDE SWING OPEN GATES AT THE ENTRANCE ROAD AND A 30" WALK-IN GATE.
4. PROVIDE A ONE INCH POLYETHYLENE WATER SERVICE LINE WITH METER BOX THAN A REDUCED PRESSURE BACKFLOW PREVENTION DEVICE LOCATED INSIDE FENCE.
5. THE CHAIN LINK FABRIC SHALL BE HOT-DIPPED GALVANIZED AFTER WEAVING. THE SIZE OF MESH SHALL BE 2 INCHES AND THE SIZE OF COATED WIRE SHALL BE 9 GAGE. FABRIC HEIGHT SHALL BE 72 INCHES. PRIVACY SLATS TO BE INSTALLED.
6. ALL POSTS, RAILS AND APPURTENANCES SHALL BE HOT-DIPPED ZINC-COATED STEEL. PIPE POSTS SHALL HAVE TOPS WHICH EXCLUDE MOISTURE. END, CORNER, PULL AND GATE POSTS SHALL BE BRACED WITH THE SAME MATERIAL AS TOP RAIL AND TRUSSED TO LINE POSTS WITH 3/8" RODS AND TIGHTENERS.
7. TOP AND BOTTOM RAIL SHALL BE 1 5/8" OD STANDARD WEIGHT PIPE, 2.27 lbs PER FT., INTERMEDIATE POSTS SHALL BE 2" OD STANDARD WEIGHT PIPE, 2.27 lbs PER FT. AND POSTS FOR SWING GATES SHALL BE 4" OD STANDARD WEIGHT PIPE, 9.11 lbs PER FT.
8. POSTS WHICH COME IN CONTACT WITH CONCRETE SHALL BE COATED WITH WATER BASE EPOXY.
9. LIFT STATION MUST BE SCREENED WITH EITHER LANDSCAPING (AT PLANT HEIGHT, NO GROW IN PERIOD) OR APPROVED OPAQUE FENCE MATERIAL.
10. GATE VALVE SHALL BE LOCATED @ OR NEAR CONNECTION TO FORCEMAIN.

TYPICAL LIFT STATION SITE PLAN

STANDARD UTILITY DETAILS
City of Stuart Public Works Department
121 S.W. Flagler Avenue, Stuart, Florida 34994
(772) 288-5300

TYPICAL LIFT STATION PLAN
DATE: OCTOBER, 2016
FILE NAME: 2016 COS Std Details.dwg
SHEET NUMBER 54

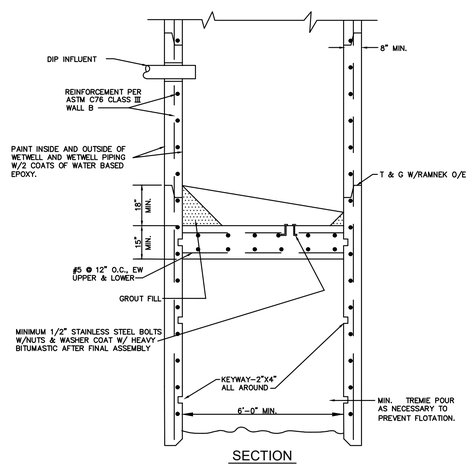

SECTION

NOTES:
1. CONCRETE WETWELL SECTIONS SHALL BE CONNECTED BY STEEL STRAPS. CONTRACTOR SHALL SUBMIT METHOD TO CITY OF STUART PUBLIC WORKS DEPARTMENT FOR APPROVAL ALONG WITH SHOP DRAWINGS.
2. SEE TYPICAL LIFT STATION DETAILS FOR ADDITIONAL DESIGN AND CONSTRUCTION STANDARDS.
3. BUOYANCY CALCULATIONS SHALL BE SUBMITTED TO THE CITY FOR REVIEW. DESIGN CRITERIA SHALL BE BASED ON DEPTH OF GROUNDWATER AT FINISHED GRADE ELEVATION.

LIFT STATION TREMIE POUR DETAIL

STANDARD UTILITY DETAILS
City of Stuart Public Works Department
121 S.W. Flagler Avenue, Stuart, Florida 34994
(772) 288-5300

LIFT STATION TREMIE POUR DETAIL
DATE: OCTOBER, 2016
FILE NAME: 2016 COS Std Details.dwg
SHEET NUMBER 55

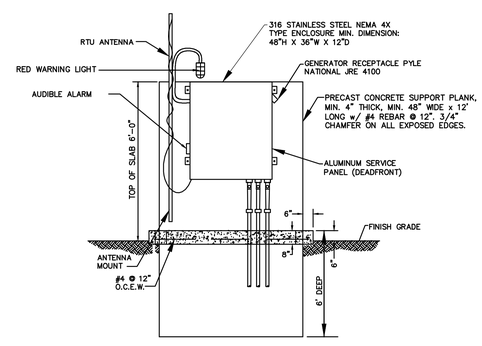

NOTES:
1. ELECTRIC METER AND PRIMARY DISCONNECT MOUNTED ON BACK SIDE OF PANEL.
2. EMERGENCY GENERATOR RECEPTACLES: PYLE NATIONAL JRE 4100 (100 amp), 2044FR (200 amp).
3. ALL POWER AND CONTROLS LINES SHALL BE CONTINUOUS (NO SPLICES).
4. POWER SUPPLY MECHANICALLY INTERLOCKED.
5. GROUND FAULT INTERRUPTER ON CONVENIENCE RECEPTACLE.
6. CONTROL PANEL SHALL BE UL LISTED AS A UNIT.
7. TELEMETRY CONDUIT SHALL BE INSTALLED BY THE CONTRACTOR WITH SWEEP 90 DEGREE BEND.
8. ALL HARDWARE, NUTS & BOLTS, AND APPURTENANCES ABOVE GROUND SHALL BE 316 STAINLESS STEEL.
9. TCU FOR DATA FLOW MOUNTED INSIDE PANEL.

TYPICAL L/S CONTROL PANEL

STANDARD UTILITY DETAILS
City of Stuart Public Works Department
121 S.W. Flagler Avenue, Stuart, Florida 34994
(772) 288-5300

TYPICAL L/S CONTROL PANEL
DATE: OCTOBER, 2016
FILE NAME: 2016 COS Std Details.dwg
SHEET NUMBER 56

ENGINEERS ✪ SURVEYORS
ENVIRONMENTAL
10250 VILLAGE PARKWAY
SUITE 201
PORT ST. LUCIE, FL 34987
☎ 772-462-2455
www.edc-inc.com
F.B.P.E. CERTIFICATE OF AUTHORIZATION 9935
L.B. CERTIFICATE OF AUTHORIZATION 8098

DCB DESIGNED BY
JLW DRAWN BY
20-313 preliminary eng r1.dwg FILENAME
Utility Details (4) LAYOUT
AS SHOWN SCALE
04/MAR/21 DATE

REVISION COMMENTS
DATE

KANNER CPUD
UTILITY DETAILS
STUART FLORIDA

DAVID C. BAGGETT, P.E.(DATE)
#81375
10250 SW VILLAGE PARKWAY - SUITE 201
PORT SAINT LUCIE, FL 34987
☎ 772-462-2455

20-313

THIS DOCUMENT, TOGETHER WITH THE CONCEPTS AND DESIGNS PRESENTED HEREIN, AS AN INSTRUMENT OF SERVICE, IS INTENDED ONLY FOR THE SPECIFIC PURPOSE AND CLIENT FOR WHICH IT WAS PREPARED. REUSE OF AND IMPROPER RELIANCE ON THIS DOCUMENT WITHOUT WRITTEN AUTHORIZATION AND ADOPTION BY EDC, INC. SHALL BE WITHOUT LIABILITY TO EDC, INC.

Z:\EDC-2020\20-313 - Costco Stuart - Kanner Highway\ENGINEERING\AutoCAD\DWGs\20-313 Preliminary Eng R1.dwg, Utility Details (4), 3/19/2021 8:49:54 AM, Jessica, EDC, Inc.

208V, 3ø, 4W, DUPLEX LIFT STATION EQUIPMENT SCHEDULE							
SERVICE CONDUIT & WIRE	MOTOR H.P.	STARTER NEMA SIZE	PUMP C.B. RATING	MCB & ECB RATING	SERVICE DISC. RATING	GEN. RECEPT.	SPECIFIC NOTES
5#8,1"C	1/2	1	15	30	30/30	7	
5#8,1"C	3/4	1	15	30	30/30	7	
5#8,1"C	1	1	15	30	30/30	7	
5#8,1"C	1-1/2	1	15	30	30/30	7	
5#8,1"C	2	1	15	30	30/30	7	
5#6,1-1/4"C"C	3	1	20	40	40/60	7	
5#6,1-1/4"C"C	5	1	40	60	60/60	7	
5#4,1-1/4"C"C	7-1/2	1	50	80	80/100	7	
4#3,1#4,1-1/4"C	10	2	60	100	100/100	7	
4-1/0,1#4,2"C	15	3	90	150	150/200	8	
4-3/0,1#4,2-1/2"C	20	3	90	150	200/200	8	3

240V, 1ø, 3W, DUPLEX LIFT STATION EQUIPMENT SCHEDULE 5							
SERVICE CONDUIT & WIRE	MOTOR H.P.	STARTER NEMA SIZE	PUMP C.B. RATING	MCB & ECB RATING	SERVICE DISC. RATING	GEN. RECEPT.	SPECIFIC NOTES
4#8,1"C	1/4	1	15	30	30/30	9	
4#8,1"C	1/3	1	15	30	30/30	9	
4#8,1"C	1/2	1	15	30	30/30	9	
4#8,1"C	3/4	1	15	30	30/30	9	
4#8,1"C	1	1	15	40	40/60	9	
4#8,1"C	1-1/2	1	20	40	40/60	9	
4#8,1"C	2	1	25	50	50/60	9	
3#6,1#8,1"C	3	1	35	60	60/60	9	4

STANDARD UTILITY DETAILS
City of Stuart Public Works Department
121 S.W. Flagler Avenue, Struart, Florida 34994
(772) 288-5300

LIFT STATION EQUIPMENT SCHEDULE

DATE: OCTOBER, 2016
FILE NAME: 2016 COS Std Details.dwg
SHEET NUMBER 59

GENERAL ELECTRICAL NOTES

1. SERVICE CONDUIT AND WIRE INDICATED IN SCHEDULE SHALL BE 100 FEET OR LESS. FOR LENGTHS GREATER THAN 100 FEET, PROVIDE FLORIDA REGISTERED ELECTRICAL ENGINEER'S DESIGN.
2. INTERRUPTING RATINGS OF ALL SHORT CIRCUIT AND GROUND FAULT PROTECTION EQUIPMENT SHALL BE PROVIDED AS PER THE DESIGN OF A FLORIDA REGISTERED ELECTRICIAN ENGINEER. A FAULT CURRENT LETTER FROM FPL SHALL BE PROVIDED.
3. FOR MOTOR HP NOT EQUAL TO NEC STANDARD SIZE, USE THE NEXT STANDARD SIZE RATING.
4. THE PREFERRED POWEWR SUPPLY FOR LIFT STATIONS SHALL BE 240V, 3PH, 4W.
5. GRINDER LIFT STATIONS (LESS THAN 2 HP) SHALL BE PROVIDED WITH AN AUTO DIALER SYSTEM AND REGULAR LIFT STATIONS (LARGER THAN 2 HP) SHALL BE PROVIDED WITH AN RTU SYSTEM.

SPECIFIC ELECTRICAL NOTES

1. SPECIAL SERVICE VOLTAGE MAY BE PERMITTED BY PERMISSION OF THE CITY OF STUART. THE PREFERRED VOLTAGE FOR 15 HP AND LESS IS 230V, 3ø, 4W.
2. COORDINATE WITH ELECTRICAL UTILITY. PROVIDE REDUCED VOLTAGE STARTERS AS REQUIRED.
3. SPECIAL SERVICE VOLTAGE MAY BE PERMITTED BY PERMISSION OF THE CITY OF STUART. THE PREFERRED VOLTAGE FOR 20 HP AND GREATER IS 480V, 3ø, 3W.
4. SPECIAL SERVICE VOLTAGE MAY BE PERMITTED BY PERMISSION OF THE CITY OF STUART. THE PREFERRED VOLTAGE FOR 3 HP AND LESS IS 230V, 3ø, 4W.
5. FOR SMALL GRINDER PUMP STATIONS WHERE ONLY 1ø, 240, 3W SERVICE IS AVAILABLE; PROVIDE CAPACITOR SYSTEM TO PROVIDE 3ø POWER OUTPUT TO PUMPS.
6. CITY DOES NOT CURRENTLY USE 480V STANDBY PORTABLE GENERATORS. THEREFORE DIESEL ENGINE PUMPS OR LOCAL DIESEL STAND BY GENERATORS SHALL BE PROVIDED.
7. PROVIDE 120/240V, 3ø, 4W, WITH GROUND, MALE RECEPTACLE, 100 AMP, PYLE NATIONAL PART NUMBER JRE4100, CONFIRM WITH CITY BEFORE CONSTRUCTION.
8. PROVIDE 120/240V, 3ø, 4W, WITH GROUND, MALE RECEPTACLE, 200 AMP, RUSSELSTOLL PART NUMBER FCF3144, CONFIRM WITH CITY BEFORE CONSTRUCTION.
9. PROVIDE 120/240V, 1ø, 3W, WITH GROUND, MALE RECEPTACLE, HUBBLE 8450A, CONFIRM WITH CITY BEFORE CONSTRUCTION.

STANDARD UTILITY DETAILS
City of Stuart Public Works Department
121 S.W. Flagler Avenue, Struart, Florida 34994
(772) 288-5300

ELECTRICAL NOTES

DATE: OCTOBER, 2016
FILE NAME: 2016 COS Std Details.dwg
SHEET NUMBER 60

ELECTRICAL LEGEND

A	AMBER LENS	IL	INDICATING LIGHT
AB	ALARM BELL	ISR	INTRINSICALLY SAFE RELAY
AL	ALARM LIGHT	LA	LIGHTNING ARRESTOR
ALT	ALTERNATOR	LS	LEVEL SWITCH
ASB	ALARM SILENCE PUSH BUTTON	MCB	MAIN CIRCUIT BREAKER
ASR	ALARM SILENCE RELAY	MS	STARTER
CR	CONTROL RELAY	OL	HEATER
CCB	CONTROL CIRCUIT BREAKER	PCB	PUMP CIRCUIT BREAKER
ETM	ELAPSED TIME METER	PM	PHASE MONITOR
ECB	EMERGENCY CIRCUIT BREAKER	PS	PRESSURE SWITCH
FL	FLASHER	R	RED LENS
F	FUSE	RL	RUN LIGHT
GFI	CONVENIENCE RECEPTACLES	RTU	REMOTE TELEMETRY UNIT
GP	GENERATOR PLUG	SC	SURGE CAPACITOR
GR	GENERATOR RECEPTACLE	XFMR	TRANSFORMER
HOA	HAND OFF AUTO SWITCH		

STANDARD UTILITY DETAILS
City of Stuart Public Works Department
121 S.W. Flagler Avenue, Struart, Florida 34994
(772) 288-5300

ELECTRICAL LEGEND

DATE: OCTOBER, 2016
FILE NAME: 2016 COS Std Details.dwg
SHEET NUMBER 61

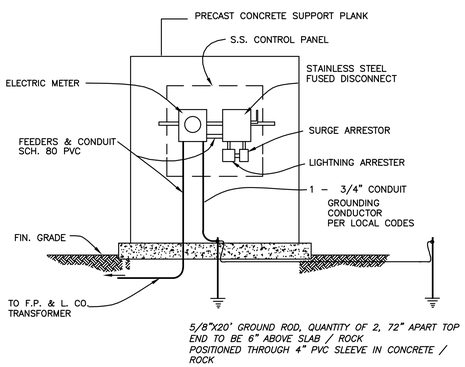

5/8"x20' GROUND ROD, QUANTITY OF 2, 72" APART TOP END TO BE 6" ABOVE SLAB / ROCK POSITIONED THROUGH 4" PVC SLEEVE IN CONCRETE / ROCK

NOTES:

1. NO PENETRATION THROUGH PANEL TOPS.

STANDARD UTILITY DETAILS
City of Stuart Public Works Department
121 S.W. Flagler Avenue, Struart, Florida 34994
(772) 288-5300

L/S CONTROL PANEL REAR VIEW

DATE: OCTOBER, 2016
FILE NAME: 2016 COS Std Details.dwg
SHEET NUMBER 62

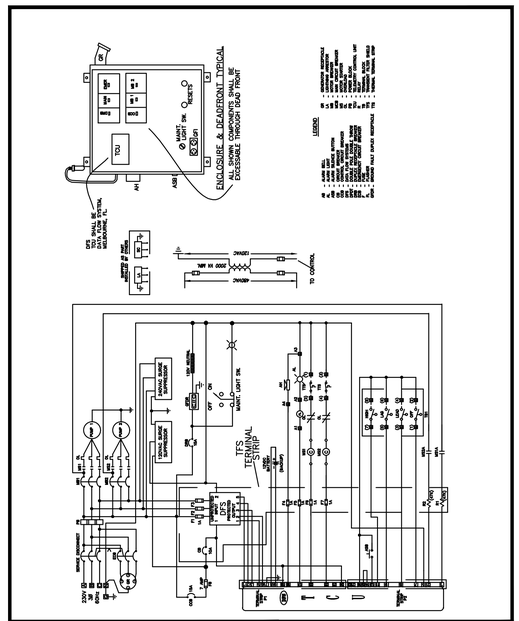

STANDARD UTILITY DETAILS
City of Stuart Public Works Department
121 S.W. Flagler Avenue, Struart, Florida 34994
(772) 288-5300

TCU PANEL

DATE: OCTOBER, 2016
FILE NAME: 2016 COS Std Details.dwg
SHEET NUMBER 63

ENGINEERS ✪ SURVEYORS
ENVIRONMENTAL
10250 VILLAGE PARKWAY
SUITE 201
PORT ST. LUCIE, FL 34987
☎ 772-462-2455
www.edc-inc.com
F.B.P.E. CERTIFICATE OF AUTHORIZATION 9935
L.B. CERTIFICATE OF AUTHORIZATION 8098

DESIGNED BY: DCB
DRAWN BY: JLW
FILENAME: 20-313 preliminary eng r1.dwg
LAYOUT: Utility Details (5)
SCALE: AS SHOWN
DATE: 04/MAR/21

REVISION COMMENTS
DATE

KANNER CPUD
UTILITY DETAILS
STUART FLORIDA

DAVID C. BAGGETT, P.E.(DATE)
#81375
10250 SW VILLAGE PARKWAY - SUITE 201
PORT SAINT LUCIE, FL 34987
☎ 772-462-2455

20-313

THIS DOCUMENT, TOGETHER WITH THE CONCEPTS AND DESIGNS PRESENTED HEREIN, AS AN INSTRUMENT OF SERVICE, IS INTENDED ONLY FOR THE SPECIFIC PURPOSE AND CLIENT FOR WHICH IT WAS PREPARED. REUSE OF AND IMPROPER RELIANCE ON THIS DOCUMENT WITHOUT WRITTEN AUTHORIZATION AND ADOPTION BY EDC, INC. SHALL BE WITHOUT LIABILITY TO EDC, INC.

Z:\EDC-2020\20-313 - Costco Stuart - Kanner Highway\ENGINEERING\AutoCAD\DWGs\20-313 Preliminary Eng R1.dwg, Utility Details (5), 3/19/2021 8:49:57 AM, Jessica, EDC, Inc.

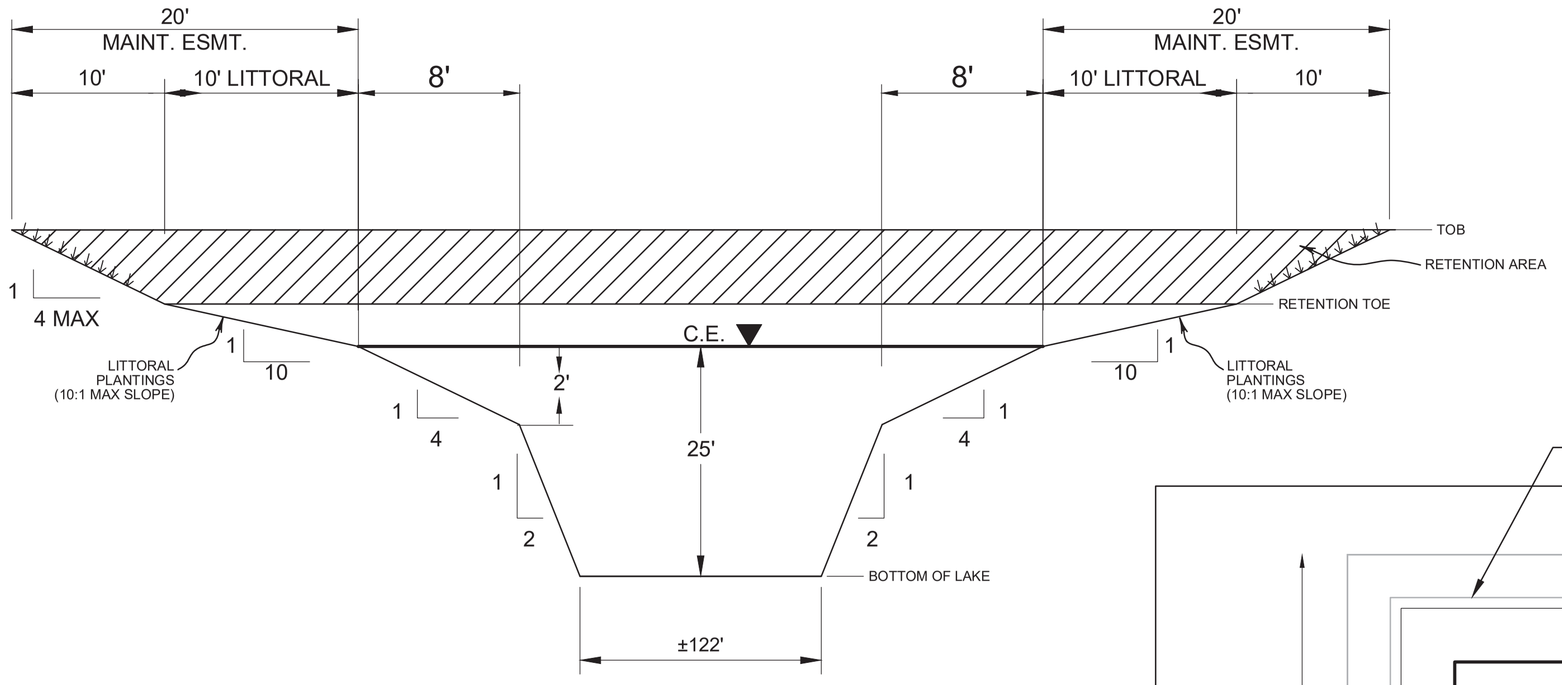

TYPICAL LAKE SECTION A-A

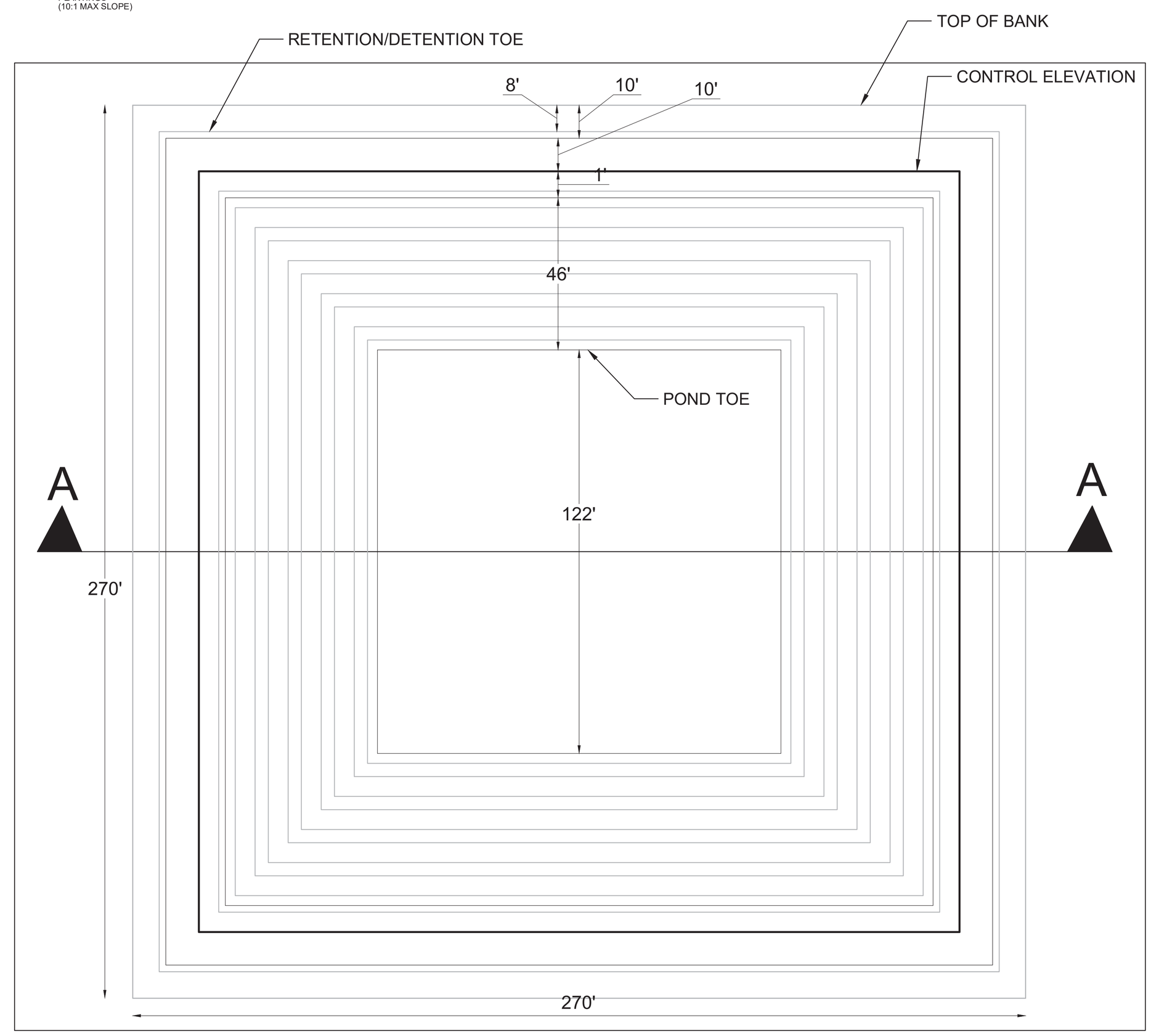

Page 1 of 1

Cut/Fill Report

Generated: 2021-03-10 16:10:38

By user: Mark

Drawing: Z:\EDC-2020\20-313 - Costco Stuart - Kanner Highway\ENGINEERING\AutoCAD\DWGs\Z:\EDC-2020\20-313 - Costco Stuart - Kanner Highway\ENGINEERING\AutoCAD\DWGs\20-313 Detention Area Exhibit.dwg

Volume Summary

Name Type	Cut Factor	Fill Factor	2d Area (Sq. Ft.)	Cut (Cu. Yd.)	Fill (Cu. Yd.)	Net (Cu. Yd.)
Surface1 full	1.0000	1.0000	72900.00	31606.35	0.00	31606.35<Cut>

Totals

	2d Area (Sq. Ft.)	Cut (Cu. Yd.)	Fill (Cu. Yd.)	Net (Cu. Yd.)
Total	72900.00	31606.35	0.00	31606.35<Cut>

* Value adjusted by cut or fill factor other than 1.0

file:///C:/Users/Mark/AppData/Local/Temp/CutFillReport.xml 3/10/2021

ENGINEERS ◆ SURVEYORS
ENVIRONMENTAL
10250 VILLAGE PARKWAY
SUITE 201
PORT ST. LUCIE, FL 34987
772-462-2455
www.edc-inc.com
F.B.P.E. CERTIFICATE OF AUTHORIZATION 9935
L.B. CERTIFICATE OF AUTHORIZATION 8098

DESIGNED BY	MDL
DRAWN BY	MDL
FILENAME	20-313 detention area exhibit.dwg
LAYOUT	Retention Exhibit
SCALE	AS SHOWN
DATE	10/04/2021

REVISION COMMENTS

DATE

KANNER HIGHWAY PUD

LAKE EXCAVATION VS RETENTION EXHIBIT

STUART FLORIDA

DAVID C. BAGGETT, P.E.(DATE)
#81375
10250 SW VILLAGE PARKWAY - SUITE 201
PORT SAINT LUCIE, FL 34987
772-462-2455

20-313

THIS DOCUMENT, TOGETHER WITH THE CONCEPTS AND DESIGNS PRESENTED HEREIN, AS AN INSTRUMENT OF SERVICE, IS INTENDED ONLY FOR THE SPECIFIC PURPOSE AND CLIENT FOR WHICH IT WAS PREPARED. REUSE OF AND IMPROPER RELIANCE ON THIS DOCUMENT WITHOUT WRITTEN AUTHORIZATION AND ADOPTION BY EDC, INC. SHALL BE WITHOUT LIABILITY TO EDC, INC.

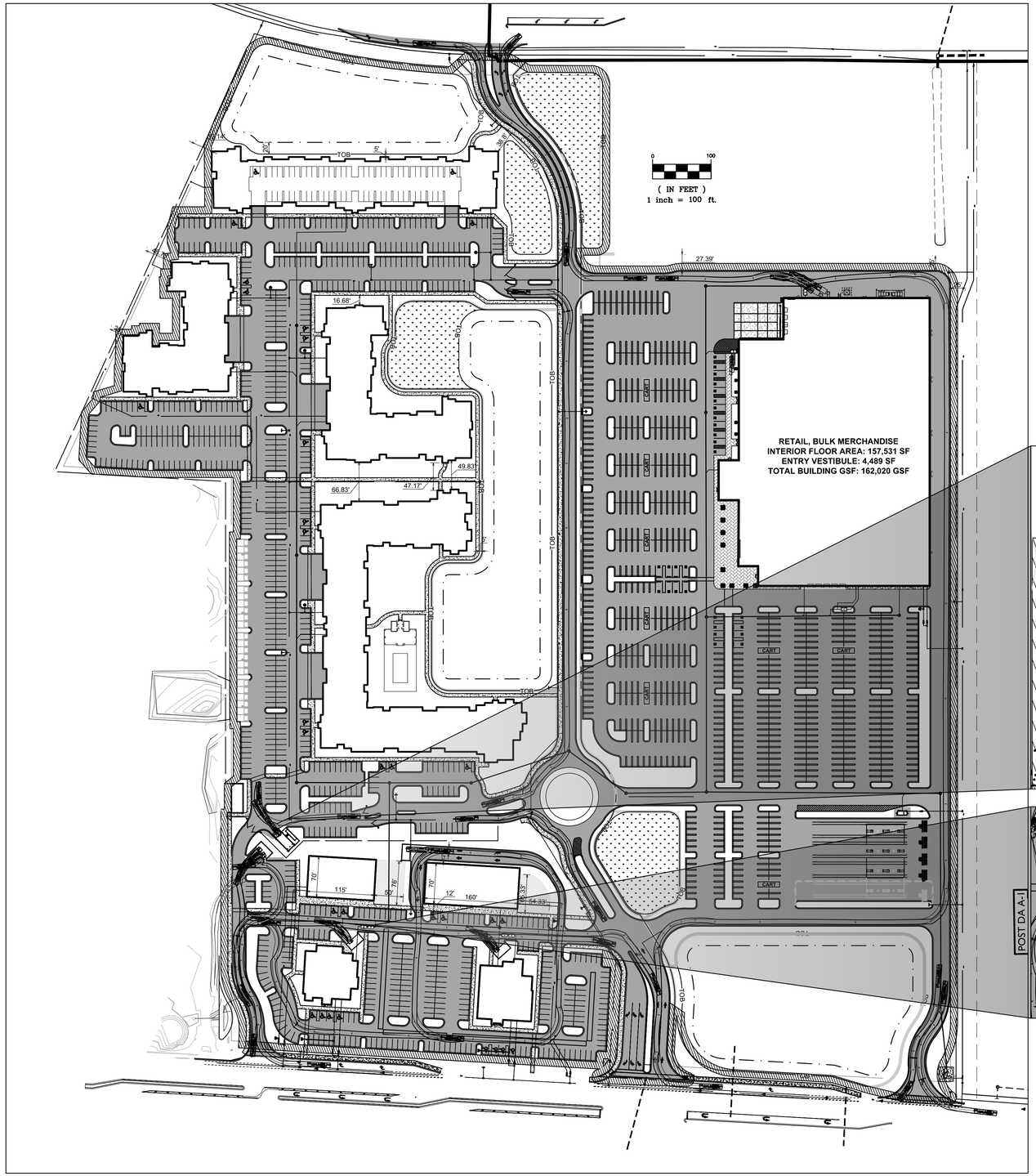

General Data

Name: Rear-Load Garbage Truck

Library: NCHRP REPORT 659 (US

Region: North America

Type: Garbage Truck 2

Class: Refuse Collection

Lock to Lock Time: 6.0 sec.

Steering Lock Angle: 27.4 deg.

Creation Units: feet

Displayed Data

Plan View Data

Profile View Data

Display Units: feet

Overall Vehicle Length: 38.08 ft

Current Part Data

Tractor: Full

Width: 8.00

Steering: Front Only

Front Axle Group

Axles: 1

Wheels: 2

Track: 8.00 ft

Rear Axle Group

Axles: 2

Wheels: 4

Track: 8.00 ft

38.08

3.58 22.00 0.00

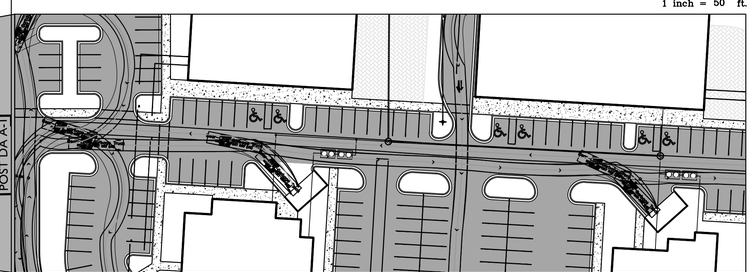

LEGEND

	EXISTING METER
	PROPOSED SIGN
	PROPOSED MITERED END SECTION
	HANDICAP PARKING SYMBOL
	EXISTING CONCRETE
	EXISTING PAVEMENT
	PROPOSED PAVEMENT
	PROPOSED CONCRETE

811 It's fast. It's free. It's the law.

Know what's **below.** **Call** before you dig.

www.callsunshine.com

ENGINEERS & SURVEYORS

PORT SAINT LUCIE OFFICE
10250 SW VILLAGE PARKWAY - SUITE 201
PORT SAINT LUCIE, FL 34987
☎ 772-462-2455

www.edc-inc.com

F.B.P.E. CERTIFICATE OF AUTHORIZATION 9935
L.B. CERTIFICATE OF AUTHORIZATION 8098

DB	DESIGNED BY
JJL	DRAWN BY
2 - costco master site plan4 auto t	FILENAME
A-TURN GARBAGE TRUCK	LAYOUT
AS SHOWN	SCALE
1/MAR/2021	DATE

REVISION COMMENTS | DATE

KANNER CPUD

GARBAGE TRUCK TURNING EXHIBIT

STUART FLORIDA

(DATE)

10250 SW VILLAGE PARKWAY - SUITE 201
PORT SAINT LUCIE, FL 34987
☎ 772-462-2455

20-313

01 OF 01

THIS DOCUMENT, TOGETHER WITH THE CONCEPTS AND DESIGNS PRESENTED HEREIN, AS AN INSTRUMENT OF SERVICE, IS INTENDED ONLY FOR THE SPECIFIC PURPOSE AND CLIENT FOR WHICH IT WAS PREPARED. REUSE OF AND IMPROPER RELIANCE ON THIS DOCUMENT WITHOUT WRITTEN AUTHORIZATION AND ADOPTION BY EDC, INC. SHALL BE WITHOUT LIABILITY TO EDC, INC.

Z:\EDC-2020\20-313 - Costco Stuart - Kanner Highway\ENGINEERING\AutoCAD\DWGs\20-313 - Costco Master Site Plan4 AUTO TURN.dwg, A-TURN GARBAGE TRUCK, 3/19/2021 10:53:25 AM, James, EDC, Inc.

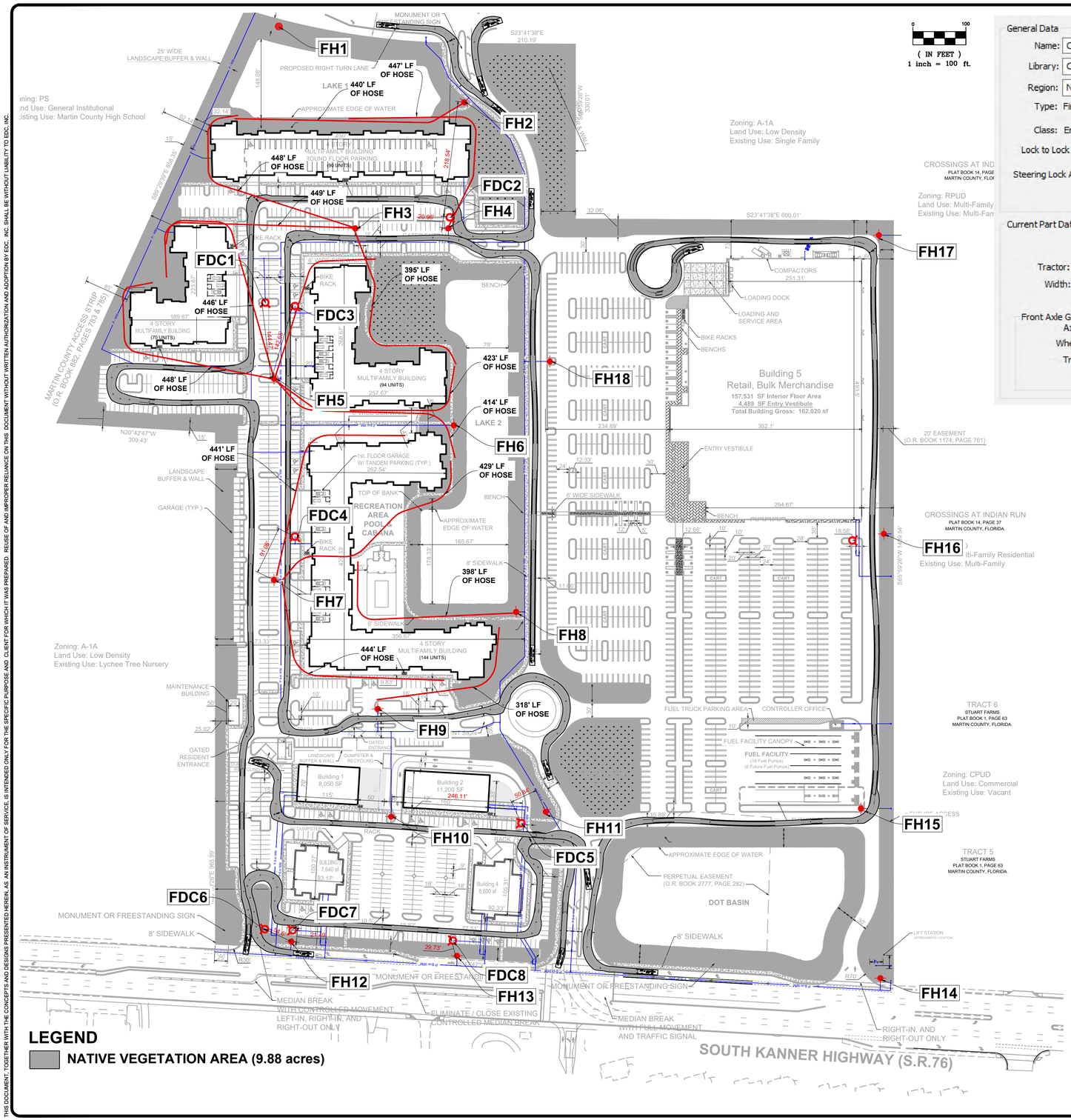

General Data

Name: CITY OF STUART-FIRE

Library: Custom

Region: North America

Type: Fire Truck Pumper

Class: Emergency Vehicle

Lock to Lock Time: 6.0 sec.

Steering Lock Angle: 45.0 deg.

Displayed Data

Plan View Data / Profile View Data

Creation Units: feet

Overall Vehicle Length: 38.00 ft

Current Part Data

Tractor: Full

Width: 9.60

Steering: Front Only

Front Axle Group

Axles: 1

Wheels: 2

Track: 6.91 ft

Rear Axle Group

Axles: 1

Wheels: 4

Track: 6.91 ft

38.00

8.45 | 19.23 | 10.32

LEGEND

	EXISTING METER		PROPOSED FDC
	PROPOSED SIGN		PROPOSED FIRE HYDRANT
	PROPOSED MITERED END SECTION		HOSE AS THE LINE LIES
	HANDICAP PARKING SYMBOL		
	EXISTING CONCRETE		
	EXISTING PAVEMENT		
	PROPOSED PAVEMENT		
	PROPOSED CONCRETE		

LEGEND

NATIVE VEGETATION AREA (9.88 acres)

811 It's fast. It's free. It's the law.
Know what's below. Call before you dig.
www.callsunshine.com

ENGINEERS & SURVEYORS
PORT SAINT LUCIE OFFICE
10250 SW VILLAGE PARKWAY - SUITE 201
PORT SAINT LUCIE, FL 34987
772-462-2455
www.edc-inc.com
F.B.P.E. CERTIFICATE OF AUTHORIZATION 9935
L.B. CERTIFICATE OF AUTHORIZATION 8098

DB	DESIGNED BY
JJL	DRAWN BY
costco master site plan5 auto	FILENAME
FIRE PROTECTION PLAN	LAYOUT
AS SHOWN	SCALE
1/04/2021	DATE

REVISION COMMENTS | DATE

KANNER CPUD

FIRE PROTECTION & ACCESS EXHIBIT

STUART FLORIDA

DAVID C. BAGGETT, P.E.(DATE)
#81375
10250 SW VILLAGE PARKWAY - SUITE 201
PORT SAINT LUCIE, FL 34987
772-462-2455

20-313

01 OF 01

THIS DOCUMENT, TOGETHER WITH THE CONCEPTS AND DESIGNS PRESENTED HEREIN, AS AN INSTRUMENT OF SERVICE, IS INTENDED ONLY FOR THE SPECIFIC PURPOSE AND CLIENT FOR WHICH IT WAS PREPARED. REUSE OF AND IMPROPER RELIANCE ON THIS DOCUMENT WITHOUT WRITTEN AUTHORIZATION AND ADOPTION BY EDC, INC. SHALL BE WITHOUT LIABILITY TO EDC, INC.

Z:\EDC-2020\20-313 - Costco Stuart - Kanner Highway\ENGINEERING\AutoCAD\DWGs\20-313 - Costco Master Site Plan5 AUTO TURN.dwg, FIRE PROTECTION PLAN, 4/20/2021 4:50:09 PM, James, EDC, Inc.

ELECTRICAL SHEET INDEX

E0.1	ELECTRICAL NOTES, LEGEND & INDEX
E1.1	SITE PHOTOMETRIC PLAN
E1.2	SITE PHOTOMETRIC PLAN
E1.3	SITE PHOTOMETRIC PLAN
E1.4	SITE PHOTOMETRIC PLAN
E1.5	SITE PHOTOMETRIC PLAN
E1.6	SITE PHOTOMETRIC PLAN
E1.7	SITE PHOTOMETRIC PLAN
E1.8	SITE PHOTOMETRIC PLAN
E1.9	SITE PHOTOMETRIC PLAN
E1.10	SITE PHOTOMETRIC PLAN
E1.11	SITE PHOTOMETRIC PLAN

LIGHTING FIXTURE SCHEDULE

TYPE	MANUFACTURER	CATALOG NUMBER	DESCRIPTION	LAMPS Qty	LAMPS Type	LAMPS Total Wattage	DIMMING	VOLTS	MOUNTING	REMARKS
P	VISIONAIRE LIGHTING	EA-24-40-35-LI-D	SINGLE HEAD LED SITE LUMINAIRE FOR COSTCO SITE, MOUNTED 33.5' AFG	INCL	LED	421	DYNA-DIMMER ONBOARD	PER PLAN	POLE	1,2,3
P1	VISIONAIRE LIGHTING	BS100LED-2HT-LO-WT35-120-277V	SINGLE HEAD LED SITE LUMINAIRE FOR COSTCO SITE, MOUNTED 33.5' AFG	INCL	LED	353	DYNA-DIMMER ONBOARD	PER PLAN	POLE	1,2,3
P2	VISIONAIRE LIGHTING	49829OZ	DOUBLE HEAD LED SITE LUMINAIRE FOR COSTCO SITE, MOUNTED 33.5' AFG	INCL	LED	706	DYNA-DIMMER ONBOARD	PER PLAN	POLE	1,2,3
P3	VISIONAIRE LIGHTING	63228ZJ-PIR	TRIPLE HEAD LED SITE LUMINAIRE FOR COSTCO SITE, MOUNTED 33.5' AFG	INCL	LED	1059	DYNA-DIMMER ONBOARD	PER PLAN	POLE	1,2,3
P4	VISIONAIRE LIGHTING	PEH-1-AT	QUAD HEAD LED SITE LUMINAIRE FOR COSTCO SITE, MOUNTED 33.5' AFG	INCL	LED	1412	DYNA-DIMMER ONBOARD	PER PLAN	POLE	1,2,3
P5	VISIONAIRE LIGHTING	VA4-R-SA-AT	SINGLE HEAD SITE LUMINAIRE FOR COSTCO SITE, MOUNTED 28' AFG	INCL	LED	267	DYNA-DIMMER ONBOARD	PER PLAN	POLE	1,2,3
W	VISIONAIRE LIGHTING	ALP2-100-40-3-U-SLA-D-ALP2-S-BLS	SINGLE WALL MOUNT LED SITE LUMINAIRE FOR COSTCO SITE, MOUNTED 20' AFG	INCL	LED	177	DYNA-DIMMER ONBOARD	PER PLAN	WALL	1,2
SA	VISIONAIRE LIGHTING	EA-24-40-35-LI-D	SINGLE HEAD LED SITE LUMINAIRE ON CONCRETE POLE, MOUNTED 28' AFG	INCL	LED	267	DYNA-DIMMER ONBOARD	PER PLAN	POLE	1,2,4
SB	VISIONAIRE LIGHTING	BS100LED-2HT-LO-WT35-120-277V	SINGLE HEAD LED SITE LUMINAIRE ON CONCRETE POLE, MOUNTED 28' AFG	INCL	LED	266	DYNA-DIMMER ONBOARD	PER PLAN	POLE	1,2,4
SC	VISIONAIRE LIGHTING	49829OZ	SINGLE HEAD LED SITE LUMINAIRE ON CONCRETE POLE, MOUNTED 28' AFG	INCL	LED	171	DYNA-DIMMER ONBOARD	PER PLAN	POLE	1,2,4

LIGHTING SCHEDULE NOTES:

1. PROVIDE SUBMITTALS FOR ARCHITECT/ENGINEER REVIEW PRIOR TO ORDERING. NO SUBSTITUTIONS ALLOWED.
2. PROVIDE MOTION SENSOR AND DYNA-DIMMER FOR EACH LUMINAIRE TO AUTOMATICALLY DIM EACH TO 50% NO LATER THAN MIDNIGHT TO 6AM, 1-HOUR AFTER/BEFORE CLOSE/OPENING, OR WHEN NO ACTIVITY FOR 15 MINUTES, PER 7TH EDITION FBC, C405-2-6.
3. POLE MOUNT PER COSTCO POLE DETAIL. PROVIDE CERTIFIED WIND LOAD CALCULATION TO MEET 170MPH, SIGNED AND SEALED BY FLORIDA REGISTERED ENGINEER.
4. POLE MOUNT ON DIRECT BURIAL CONCRETE POLE. PROVIDE CERTIFIED WIND LOAD CALCULATION TO MEET 170MPH, SIGNED AND SEALED BY FLORIDA REGISTERED ENGINEER.

Luminaire Schedule

Project: COSTCO STUART SITE 02-24-2021

Symbol	Qty	Label	[MANUFAC]	Description	Arr. Lum. Lumens	LLF	Lum. Watts	Total Watts
	4	P	Visionaire Lighting LLC	VLX-1-T3-160LC-7-4K-UNV POLE MOUNT 33.5' AFG	49816	0.900	421	1684
	1	P1	Visionaire Lighting LLC	VLX-1-T5W-160LC-7-4K-UNV POLE MOUNT 33.5' AFG	43091	0.900	353	353
	20	P2	Visionaire Lighting LLC	VLX-1-T5W-160LC-7-4K-UNV POLE MOUNT 33.5' AFG	86182	0.900	353	14120
	6	P3	Visionaire Lighting LLC	VLX-1-T5W-160LC-7-4K-UNV POLE MOUNT 33.5' AFG	129273	0.900	353	6354
	2	P4	Visionaire Lighting LLC	VLX-1-T5W-160LC-7-4K-UNV POLE MOUNT 33.5' AFG	172364	0.900	353	2824
	13	P5	Visionaire Lighting LLC	VLX-1-T2-160LC-5-4K-UNV-CLS POLE MOUNT 28' AFG	22774	0.900	267	3471
	5	W	Visionaire Lighting LLC	VMX-1-T4-80LC-7-4K-UNV WALL MOUNT 20' AFG	20959	0.900	177	885
	20	SA	Visionaire Lighting LLC	VLX-1-T2-160LC-5-4K-UNV-CLS POLE MOUNT 28' AFG	22774	0.900	267	5340
	24	SB	Visionaire Lighting LLC	VLX-1-T5W-160LC-5-5K-UNV POLE MOUNT 28' AFG	32951	0.900	266	6384
	7	SC	Visionaire Lighting LLC	VLX-1-T3-160LC-3-4K-UNV POLE MOUNT 28' AFG	23138	0.900	171	1197

Calculation Summary

Project: COSTCO STUART SITE 02-24-2021

Label	CalcType	Units	Avg	Max	Min	Avg/Min	Max/Min
RESIDENTIAL PROP LINE NO 8' AFG	Illuminance	Fc	0.06	0.2	0.0	N.A.	N.A.
RESIDENTIAL PROP LINE SO 8' AFG	Illuminance	Fc	0.15	0.2	0.0	N.A.	N.A.
COSCTO WAREHOUSE PARKING	Illuminance	Fc	5.24	12.1	2.5	2.10	4.84
COSTCO MAIN WAREHOUSE ENTRANCE	Illuminance	Fc	7.67	9.5	5.2	1.48	1.83
ENTRY ROAD	Illuminance	Fc	3.05	7.0	0.6	5.08	11.67
MIXED USE SITE & PARKING	Illuminance	Fc	1.82	5.7	0.6	3.03	9.50

ELECTRICAL LEGEND

- TELEPHONE OUTLET WITH 3/4" CONDUIT STUBBED OUT FROM WALL 6" ABOVE CEILING. MOUNT 18" A.F.F. TO CENTER LINE OF OUTLET UNLESS OTHERWISE NOTED.
- DATA OUTLET WITH 3/4" CONDUIT STUBBED OUT FROM WALL 6" ABOVE CEILING. MOUNT 18" A.F.F. TO CENTER LINE OF OUTLET UNLESS OTHERWISE NOTED.
- TELEPHONE/DATA OUTLET WITH 3/4" CONDUIT STUBBED OUT FROM WALL 6" ABOVE CEILING. MOUNTED ABOVE COUNTER, SEE ARCHITECTURAL DRAWING FOR SPECIFIC REQUIREMENTS.
- TELEPHONE/DATA OUTLET WITH 3/4" CONDUIT STUBBED OUT FROM WALL 6" ABOVE CEILING. MOUNT 18" A.F.F. TO CENTER LINE OF OUTLET UNLESS OTHERWISE NOTED.
- TELEPHONE/DATA OUTLET WITH 3/4" CONDUIT RUN TO THE NEAREST STUD WALL AND STUBBED OUT FROM WALL 6" ABOVE CEILING. PROVIDE BRASS COVER PLATE AND CARPET FLANGE.
- TV — TELEVISION RECESSED OUTLET. LEGRAND "TV1WMTVSSWCC2". MOUNT AT 18" A.F.F. TO CENTER LINE OF OUTLET UNLESS OTHERWISE NOTED.
- 20 AMP SINGLE RECEPTACLE (NEMA 5-20R) MOUNTED AT 18" A.F.F. TO CENTER LINE OF OUTLET UNLESS NOTED OTHERWISE.
- 20 AMP DUPLEX RECEPTACLE (NEMA 5-20R) MOUNTED AT 18" A.F.F. TO CENTER LINE OF OUTLET UNLESS NOTED OTHERWISE.
- 20 AMP QUADRUPLEX RECEPTACLE (NEMA 5-20R) MOUNTED AT 18" A.F.F. TO CENTER LINE OF OUTLET UNLESS NOTED OTHERWISE.
- GFI — 20 AMP DUPLEX RECEPTACLE (NEMA 5-20R) WITH GROUND FAULT CIRCUIT INTERRUPTER, MOUNT AT 18" A.F.F. TO CENTER LINE OF OUTLET. UNLESS NOTED OTHERWISE.
- 20 AMP DUPLEX RECEPTACLE (NEMA 5-20R) MOUNTED ABOVE COUNTER SEE ARCHITECTURAL DRAWINGS FOR SPECIFIC REQUIREMENTS.
- 20 AMP DUPLEX RECEPTACLE (NEMA 5-20R) WITH ISOLATED GROUND, MOUNT AT 18" A.F.F. TO CENTERLINE OF OUTLET UNLESS OTHERWISE NOTED.
- 20 AMP QUADRUPLEX RECEPTACLE (NEMA 5-20R) WITH ISOLATED GROUND, MOUNT AT 18" A.F.F. TO CENTERLINE OF OUTLET UNLESS OTHERWISE NOTED.
- 20 AMP DUPLEX RECEPTACLE (NEMA 5-20R), RECESS FLOOR MOUNTED. PROVIDE BRASS COVER PLATE AND CARPET FLANGE.
- 20 AMP DUPLEX RECEPTACLE (NEMA 5-20R), CEILING MOUNTED.
- SPECIAL-PURPOSE RECEPTACLE
- J — JUNCTION BOX
- J P — SINGLE GANG JUNCTION BOX FOR POWER CONNECTION TO MODULAR FURNITURE SYSTEM INSTALL IN EXACT MANNER AS DIRECTED BY FURNITURE SUPPLIER.
- J T/D — DOUBLE GANG JUNCTION BOX FOR TELEPHONE/DATA CONNECTION TO MODULAR FURNITURE SYSTEM. INSTALL IN EXACT MANNER AND LOCATION AS DIRECTED BY FURNITURE SUPPLIER. EXTEND (2) 3/4" EMPTY CONDUITS FROM JUNCTION BOX TO ABOVE CEILING AND TERMINATE WITH INSULATING BUSHING 6" FROM WALL.
- TELE/POWER POLE FOR TELEPHONE/DATA/POWER CONNECTION TO MODULAR FURNITURE 8 WIRE SYSTEM (SEE DETAIL THIS SHEET). INSTALL IN EXACT MANNER AND LOCATION AS DIRECTED BY FURNITURE SUPPLIER, WIREMOLD CATALOG # 25DTP-4D W/IVORY FINISH.
- SPECIAL PURPOSE RECEPTACLE MOUNTED BELOW RAISE FLOOR.
- EF — EXHAUST FAN. SEE MECHANICAL DRAWINGS FOR SPECIFICATIONS.
- $ — SINGLE POLE, 20 AMP, SWITCH. MOUNT 46" A.F.F. TO CENTERLINE OF SWITCH UNLESS OTHERWISE NOTED.
- $3 — 3-WAY, 20 AMP, SWITCH. MOUNT 46" A.F.F. TO CENTERLINE OF SWITCH UNLESS OTHERWISE NOTED.
- $D — SINGLE POLE, 20 AMP, SWITCH WITH DIMMER. MOUNT 46" A.F.F. TO CENTERLINE OF SWITCH UNLESS OTHERWISE NOTED.
- $M — MOTOR RATED SWITCH
- $VS — VACANCY SENSOR SWITCH, WATTSTOPPER, MOUNT 46" A.F.F. TO CENTERLINE OF SWITCH UNLESS OTHERWISE NOTED.
- $ — TWO POLE, 30 AMP SWITCH. MOUNT ADJACENT EQUIPMENT TO BE CONTROLLED.
- FACTORY MOUNTED DISCONNECT/STARTER (SEE MECHANICAL SCHEDULE)
- A B C — FUSIBLE DISCONNECT SWITCH A = POLES, B= FRAME SIZE, C= FUSE RATING
- A B C — FUSIBLE MOTOR STARTER DISCONNECT SWITCH A = POLES, B= NEMA SIZE, C= FUSE RATING
- GROUNDING ELECTRODE & CONDUCTOR SYSTEM
- TV — TRANSFORMER
- ELECTRICAL PANELBOARD
- TELEPHONE WOOD BACKBOARD
- WP — WEATHERPROOF
- T/C — TIME CLOCK
- RE — RELOCATED
- E — EXISTING TO REMAIN
- A.F.F. — ABOVE FINISH FLOOR
- CEILING MOUNTED DUAL TECHNOLOGY MOTION SENSOR BY WATTSTOPPER.
- LV — CEILING MOUNTED LOW VOLTAGE DUAL TECHNOLOGY MOTION SENSOR BY WATTSTOPPER.
- DS — CEILING MOUNTED DAY LIGHTING SENSOR. SENSOR TO CONTROL THE DIMMING OF ALL FIXTURES WITHIN 15' OF THE WINDOWS WITH IN ROOM.

ELECTRICAL SPECIFICATIONS

PART 1 – GENERAL

A. THE CONTRACTOR SHALL SUPPLY AND INSTALL ALL NEW ELECTRICAL WORK INDICATED. CONSTRUCTION SHALL BE IN ACCORDANCE WITH DRAWINGS AND APPLICABLE SPECIFICATIONS. IF A PROBLEM IS ENCOUNTERED IN COMPLYING WITH THIS REQUIREMENT, CONTRACTOR SHALL NOTIFY THE ARCHITECT/ENGINEER AS SOON AS POSSIBLE AFTER DISCOVERY OF THE PROBLEM AND SHALL NOT PROCEED WITH THAT PORTION OF THE WORK UNTIL ARCHITECT/ENGINEER HAS DIRECTED CORRECTIVE ACTION TO BE TAKEN.

B. THE CONTRACTOR SHALL VISIT THE JOB SITE PRIOR TO BID AND FAMILIARIZE HIMSELF WITH ALL CONDITIONS AFFECTING ELECTRICAL AND COMMUNICATIONS INSTALLATION AND MAKE PROVISIONS AS TO THE COST THEREOF.

C. ALL WORK SHALL BE PERFORMED IN ACCORDANCE WITH THE LATEST EDITION OF THE NATIONAL ELECTRIC CODE (AS ADOPTED BY THE AUTHORITY HAVING JURISDICTION) AND ALL CODES AND ORDINANCES OF THE AUTHORITY HAVING JURISDICTION. THE SPECIFICATION, CODES AND STANDARDS LISTED BELOW ARE UTILIZED IN THIS PROJECT.

1. NATIONAL ELECTRICAL CODE (NFPA-70)
2. CODE FOR SAFETY TO LIFE (NFPA_101)
3. STANDARD FOR THE INSTALLATION, MAINTENANCE AND USE OF LOCAL PROTECTIVE SIGNALING SYSTEMS (NFPA-72)
4. UNDERWRITERS' LABORATORIES (UL)
5. NATIONAL ELECTRICAL MANUFACTURERS ASSOCIATION (NEMA)
6. AMERICAN NATIONAL STANDARDS INSTITUTE (ANSI)
7. FEDERAL SPECIFICATION (FED. SPEC.)
8. INSULATED POWER CABLE ENGINEERS ASSOCIATION (IPCEA)
9. FLORIDA BUILDING CODE. FBC 2017 EDITION
10. INSTITUTE OF ELECTRICAL AND ELECTRONIC ENGINEERS (IEEE)
11. CITY OF STUART BUILDING CODE. (AMENDMENTS TO FLORIDA BUILDING CODE FBC 2017)
12. ADDITIONALLY, DESIGNS, WORK PRACTICES AND CONDITIONS MUST CONFORM WITH THE OCCUPATIONAL SAFETY AND HEALTH ACT OF 1970 (OSHA)

D. DO NOT SCALE THE ELECTRICAL DRAWINGS. REFER TO ARCHITECTURAL PLANS AND ELEVATIONS FOR EXACT LOCATION OF ALL EQUIPMENT. CONFIRM WITH OWNER'S REPRESENTATIVE.

E. IT IS NOT THE INTENT OF THESE PLANS TO SHOW EVERY MINOR DETAIL OF CONSTRUCTION. THE CONTRACTOR IS EXPECTED TO FURNISH AND INSTALL ALL ITEMS FOR A COMPLETE ELECTRICAL SYSTEM AND PROVIDE ALL REQUIREMENTS NECESSARY FOR EQUIPMENT TO BE PLACED IN PROPER WORKING ORDER.

F. CONTRACTOR SHALL GUARANTEE ALL MATERIALS AND WORKMANSHIP FREE FROM DEFECTS FROM A PERIOD OF NOT LESS THAN ONE YEAR FROM DATE OF ACCEPTANCE.

G. CORRECTION OF ANY DEFECTS SHALL BE COMPLETED WITHOUT ADDITIONAL CHARGE AND SHALL INCLUDE REPLACEMENT OR REPAIR OF ANY OTHER PHASE OF THE INSTALLATION WHICH MAY HAVE BEEN DAMAGED THERE BY.

H. ALL REQUIRED INSURANCE SHALL BE PROVIDED FOR PROTECTION AGAINST PUBLIC LIABILITY AND PROPERTY DAMAGE FOR THE DURATION OF THE WORK. CONTRACTOR SHALL PAY FOR ALL PERMITS, FEES, INSPECTIONS AND TESTING. CONTRACTOR TO OBTAIN PERMIT AND APPROVED SUBMITTALS PRIOR TO BEGINNING WORK OR ORDERING EQUIPMENT. THE TERM "PROVIDE" USED IN THE CONSTRUCTION DOCUMENTS AND SPECIFICATIONS SHALL MEAN THAT THE CONTRACTOR IS TO FURNISH, INSTALL AND CONNECT COMPLETE.

PART 2 – PRODUCTS

A. MINIMUM WIRE SIZE SHALL BE #12 A.W.G. (EXCEPT AS NOTED OTHERWISE FOR CONTROL WIRING). ALL CONDUCTORS SHALL BE 98% CONDUCTIVITY, COPPER WITH "THHN-THWN" INSULATION UNLESS OTHERWISE NOTED.

B. ELECTRICAL METALLIC TUBING (EMT) SHALL BE OF BEST QUALITY STEEL, SMOOTH INSIDE AND OUT AND SHALL BE HOT-DIPPED GALVANIZED.

C. OUTLET BOXES SHALL BE PRESSED STEEL IN DRY LOCATIONS, CAST ALLOY WITH THREADED HUBS

I. IN WET OR DAMP LOCATIONS AND SPECIAL ENCLOSURES FOR OTHER CLASSIFIED AREAS.

D. RIGID NONMETALIC CONDUIT SHALL BE SCHEDULE 40 PVC.

E. ALL MATERIALS SHALL BE NEW AND BEAR UNDERWRITERS' LABELS WHERE APPLICABLE.

F. PANELBOARDS:

1. CURRENT CARRYING BUSES SHALL BE COPPER. GROUND BUS BARS SHALL BE COPPER.
2. ALL CIRCUIT BREAKERS SHALL BE BOLT ON. PLUG-IN BREAKERS ARE NOT ACCEPTABLE.
3. CIRCUIT BREAKERS USED AS SWITCHES IN FLUORESCENT OR HID LIGHTING CIRCUITS SHALL BE LISTED AND MARKED "SWD"
4. ALL CIRCUIT BREAKERS FEEDING MECHANICAL EQUIPMENT SHALL BE HACR TYPE.
5. A.I.C. RATINGS SHALL BE AS INDICATED ON PANELBOARD SCHEDULES.
6. ALL PANELBOARDS SHALL BE FURNISHED WITH PLASTIC LAMINATE NAMEPLATES WITH 1/4" ENGRAVED LETTERING FOR PANEL IDENTIFICATION.
7. ALL PANELBOARDS SHALL BE PROVIDED WITH TYPE-WRITTEN DIRECTORY OF BRANCH CIRCUIT DESIGNATIONS.

G. DISCONNECT SWITCHES SHALL BE H.P. RATED, HEAVY DUTY, QUICK-MAKE, QUICK-BREAK. ENCLOSURES SHALL BE NEMA-1 FOR INDOOR LOCATIONS, NEMA 3R FOR OUTDOOR LOCATIONSOR AS OTHERWISE NOTED.

H. MOTOR STARTERS SHALL BE MANUAL OR MAGNETIC AS INDICATED ON THE ELECTRICAL DRAWINGS, WITH OVERLOAD RELAYS IN EACH PHASE. WIRING DEVICES (GENERAL PURPOSE RECEPTACLES AND WALL SWITCHES) COLOR SHALL BE COORDINATED WITH CLIENT.

PART 3 – EXECUTION

A. COLOR CODING OF CONDUCTORS SHALL BE AS FOLLOWS:

1. 208/120 VOLTS, 3 PHASE, 4-WIRE SYSTEM: UNGROUNDED CONDUCTORS: 1 BLACK, 1 RED AND 1 BLUE. GROUNDED (NEUTRAL) CONDUCTOR: WHITE. GROUNDING CONDUCTORS SHALL BE GREEN.
2. 480/277 VOLT, 3-PHASE, 4-WIRE SYSTEM: UNGROUNDED CONDUCTORS: 1 BROWN, 1 YELLOW, AND 1 PURPLE. GROUNDED (NEUTRAL) CONDUCTORS; GREY. GROUNDING CONDUCTORS SHALL BE GREEN.
3. BRANCH CIRCUIT WIRING (#6 AND SMALLER) SHALL BE COLOR CODED BY CONTINUOUS INSULATION COLOR AND FEEDERS AND SERVICES (#4 AND LARGER) SHALL BE CODED AT ALL JUNCTION OR PULL POINTS (EXCEPT LB'S OR LBD'S) USING COLOR MARKERS OR PLASTIC TAPE MANUFACTURED FOR THE PURPOSE.

I.

B. WIRING METHODS

1. ALL CONDUCTORS SHALL BE INSTALLED IN ELECTRICAL METALLIC TUBING (EMT) UNLESS OTHERWISE NOTED, SPECIFIED OR AS SPECIFICALLY PROHIBITED BY THE AUTHORITY HAVING JURISDICTION. ALL FITTINGS AND COUPLINGS FOR EMT CONDUIT SHALL BE ALL STEEL RAIN TIGHT COMPRESSION TYPE OR ALL STEEL CONCRETE TIGHT SET SCREW TYPE.
2. SCHEDULE 40 PVC CONDUIT, WITH FITTINGS AND COUPLINGS APPROPRIATE FOR THE USE, SHALL BE INSTALLED UNDERGROUND OR BELOW SLABS ON GRADE.
3. TYPE MC CABLE WITH ALUMINUM ARMOR AND INTERNAL GROUND IS ACCEPTABLE FOR USE AS GENERAL BRANCH CIRCUIT WIRING FOR CIRCUITS 20 AMPERES OR LESS AND CONCEALED IN WALLS OR ABOVE SUSPENDED CEILING AND AS APPROVED BY THE AUTHORITY HAVING JURISDICTION.

C. ELECTRICAL SYSTEM SHALL BE COMPLETE AND EFFECTIVELY GROUNDED AS REQUIRED BY THE LATEST EDITION OF THE N.E.C. AND LOCAL CODES.

D. ALL WORK SHALL BE PERFORMED BY A LICENSED ELECTRICAL CONTRACTOR IN A FIRST CLASS WORKMANLIKE MANNER. THE COMPLETED SYSTEM SHALL BE FULLY OPERATIVE AND ACCEPTED BY ENGINEER/ARCHITECT.

E. ALL WORK SHALL BE COORDINATED WITH OTHER TRADES TO AVOID INTERFERENCE WITH THE PROGRESS OF CONSTRUCTION.

F. THE ELECTRICAL INSTALLATION SHALL MEET ALL STANDARD REQUIREMENTS OF POWER AND TELEPHONE COMPANIES, AND SHALL BE FULLY COORDINATED WITH THEM PRIOR TO COMMENCEMENT OF WORK.

G. PROVIDE AND INSTALL CONDUIT, CONDUCTORS, PULL WIRES, BOXES, COVER PLATES, AND WIRING DEVICES, FOR ALL OUTLETS AS INDICATED.

H. MATERIALS, PRODUCTS, AND EQUIPMENT, INCLUDING ALL COMPONENTS THEREOF, SHALL BE NEW AND SUCH AS APPEAR ON THE UL LIST OF APPROVED ITEMS AND SHALL MEET OR EXCEED THE REQUIREMENTS OF NEC, NEMA, AND IECE. CONTRACTOR SHALL SUBMIT AT LEAST FIVE (5) SETS OF SHOP DRAWINGS OR CUT SHEETS OF LIGHTING FIXTURES, SWITCHES, AND OTHER ELECTRICAL ITEMS FOR APPROVAL BY ENGINEER/ARCHITECT. CONTRACTOR SHALL BE RESPONSIBLE FOR ALL CUTTING AND PATCHING REQUIRED OF HIS WORK.

K. ALL LAY-IN LIGHTING FIXTURES SHALL BE SECURED TO THE SUSPENDED CEILING GRID AT EACH CORNER.

L. CONTRACTOR SHALL COORDINATE WITH MECHANICAL DRAWINGS AND PROVIDE ALL NECESSARY CONTROL WIRING.

M. ALL ELECTRICAL POWER WIRING FOR THE HVAC SYSTEM INCLUDING WIRING THRU LINE VOLTAGE CONTROL DEVICES SHALL BE THE RESPONSIBILITY OF THE ELECTRICAL CONTRACTOR.

N. THE CONTRACTOR SHALL CONFIRM WITH THE ELECTRICAL UTILITY COMPANY ANY AND ALL REQUIREMENTS SUCH AS: METERING EQUIPMENT REQUIREMENTS AND METERING EQUIPMENT LOCATION, TRANSFORMER SIZE AND LOCATION OR SERVICE POINT, CONDUIT ENTRY AND LUG SIZE RESTRICTIONS. THE CONTRACTOR SHALL SCHEDULE ALL REQUIRED DOWN TIME FOR THE OWNERS CONFIRMATION. ANY CONFLICTS AND DESCREPANCIES SHALL BE BROUGHT TO THE ATTENTION OF THE ENGINEER BEFORE PROCEEDING WITH ANY WORK.

O. PER NEC 210.8(B)(2) ALL 15- AND 20-AMPERE, 125-VOLT RECEPTACLES IN NONDWELLING-TYPE KITCHENS TO BE GFCI PROTECTED.

P. BRANCH CIRCUIT CONDUCTORS SHALL BE SIZED FOR A MAXIMUM VOLTAGE DROP OF 3% DESIGN LOAD. FBC 2017 FBC ENERGY CONSERVATION SECTION 405.7.3.

Q. FEEDER CONDUCTORS SHALL BE SIZED FOR A MAXIMUM OF 2% VOLTAGE DROP PER 405.7.3.

ELECTRICAL NOTES

ISSUED FOR REVIEW -
NOT FOR PRICING OR CONSTRUCITON

KAMM CONSULTING PROJECT #: 2021-0130
PROJECT MANAGER: JOHN MAYR

KAMM Consulting
1408 Orange Avenue
Fort Pierce, Florida 34950
Phone 954-448-0792
jmayr@kammconsulting.com
Certification of Authorization #8189

PRINCIPAL
Bradly L. Brown Florida License #58232
date
signed

lucido & associate
701 E Ocean Blvd., Stuart, Florida 34994 (772) 220-2100, Fax (772) 22

Key / Location:

Project Team:

Applicant:
M&M Realty Partners
1260 Stelton Rd
Piscataway, NJ 07704
703-839-3776

Engineer:
Maser Consulting
410 Eagleview Blvd, Suite 104
Exton, PA 19341
610-254-9140

Surveyor:
Stephen J Brown Inc
619 E. 5th St
Stuart, FL 34994
772-288-7176

Landscape Architect/Land Planner:
Lucido & Associates
701 E Ocean Blvd
Stuart, FL 34904
772-220-2100

KANNER CPUD
City of Stuart, Martin County, Florida

Master Site Plan

Date	By	Description
8.21.2020	SLS	Initial Submittal
12.18.2020	SLS	1st Resubmittal

NORTH

SCALE: 1" = 100'

0 50' 100' 200'

REG. # 1018
Thomas P. Lucido

Designer	---	Sheet
Manager	---	
Project Number	---	E0.1
Municipal Number	---	
Computer File		

© Copyright Lucido & Associates. These documents and their contents are the property of Lucido & Associates. Any reproductions, revisions, modifications or use of these docume without the express written consent of Lucido & Associates is prohibited by law.

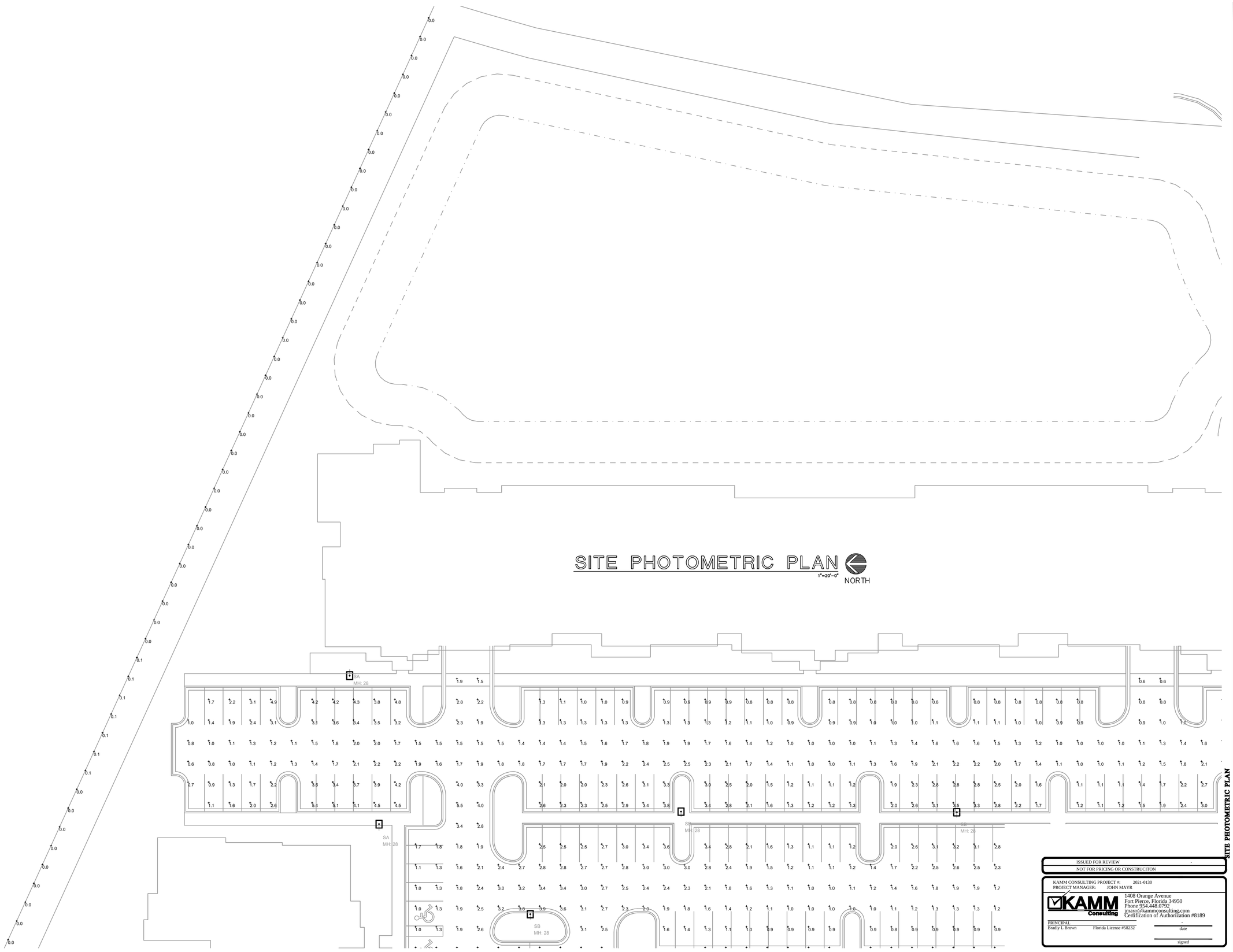

SITE PHOTOMETRIC PLAN

ISSUED FOR REVIEW
NOT FOR PRICING OR CONSTRUCITON

KAMM CONSULTING PROJECT #: 2021-0130
PROJECT MANAGER: JOHN MAYR

KAMM Consulting
1408 Orange Avenue
Fort Pierce, Florida 34950
Phone 954.448.0792
jmayr@kammconsulting.com
Certification of Authorization #8189

PRINCIPAL
Bradly L. Brown Florida License #58232

date

signed

lucido & associate
701 E Ocean Blvd., Stuart, Florida 34994 (772) 220-2100, Fax (772) 22

Key / Location:

Project Team:

Applicant:
M&M Realty Partners
1260 Stelton Rd
Piscataway, NJ 07704
703-839-3776

Engineer:
Maser Consulting
410 Eagleview Blvd, Suite 104
Exton, PA 19341
610-254-9140

Surveyor:
Stephen J Brown Inc
619 E. 5th St
Stuart, FL 34994
772-288-7176

Landscape Architect/Land Planner:
Lucido & Associates
701 E Ocean Blvd
Stuart, FL 34904
772-220-2100

KANNER CPUD

City of Stuart, Martin County, Florida

Master Site Plan

Date	By	Description
8.21.2020	SLS	Initial Submittal
12.18.2020	SLS	1st Resubmittal

NORTH

SCALE: 1" = 100'

0 50' 100' 200'

REG. # 1018
Thomas P. Lucido

Designer	---	Sheet
Manager	---	E1.1
Project Number	---	
Municipal Number	---	
Computer File		

© Copyright Lucido & Associates. These documents and their contents are the property of Lucido & Associates. Any reproductions, revisions, modifications or use of these docume without the express written consent of Lucido & Associates is prohibited by law.

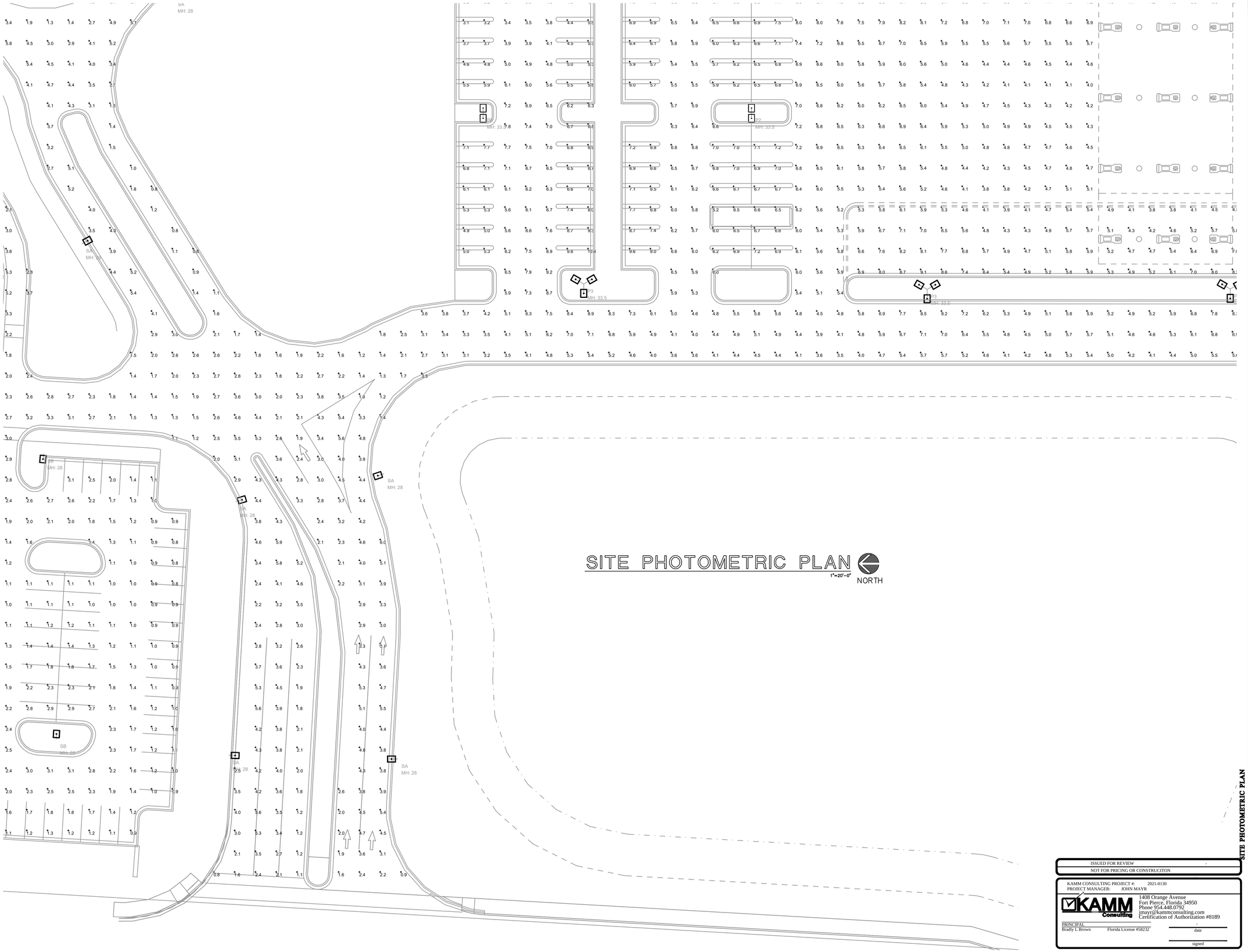

SITE PHOTOMETRIC PLAN

ISSUED FOR REVIEW
NOT FOR PRICING OR CONSTRUCITON

KAMM CONSULTING PROJECT #: 2021-0130
PROJECT MANAGER: JOHN MAYR

KAMM Consulting
1408 Orange Avenue
Fort Pierce, Florida 34950
Phone 954-448-0792
jmayr@kammconsulting.com
Certification of Authorization #8189

PRINCIPAL
Bradly L. Brown Florida License #58232

date

signed

lucido & associate

701 E Ocean Blvd., Stuart, Florida 34994 (772) 220-2100, Fax (772) 22

Key / Location:

Project Team:

Applicant:
M&M Realty Partners
1260 Stelton Rd
Piscataway, NJ 07704
703-839-3776

Engineer:
Maser Consulting
410 Eagleview Blvd, Suite 104
Exton, PA 19341
610-254-9140

Surveyor:
Stephen J Brown Inc
619 E. 5th St
Stuart, FL 34994
772-288-7176

Landscape Architect/Land Planner:
Lucido & Associates
701 E Ocean Blvd
Stuart, FL 34904
772-220-2100

KANNER CPUD
City of Stuart, Martin County, Florida

Master Site Plan

Date	By	Description
8.21.2020	SLS	Initial Submittal
12.18.2020	SLS	1st Resubmittal

NORTH

SCALE: 1" = 100'

0 50' 100' 200'

REG. # 1018
Thomas P. Lucido

Designer	---	Sheet
Manager	---	E1.10
Project Number	---	
Municipal Number	---	
Computer File		

© Copyright Lucido & Associates. These documents and their contents are the property of Lucido & Associates. Any reproductions, revisions, modifications or use of these docume without the express written consent of Lucido & Associates is prohibited by law.

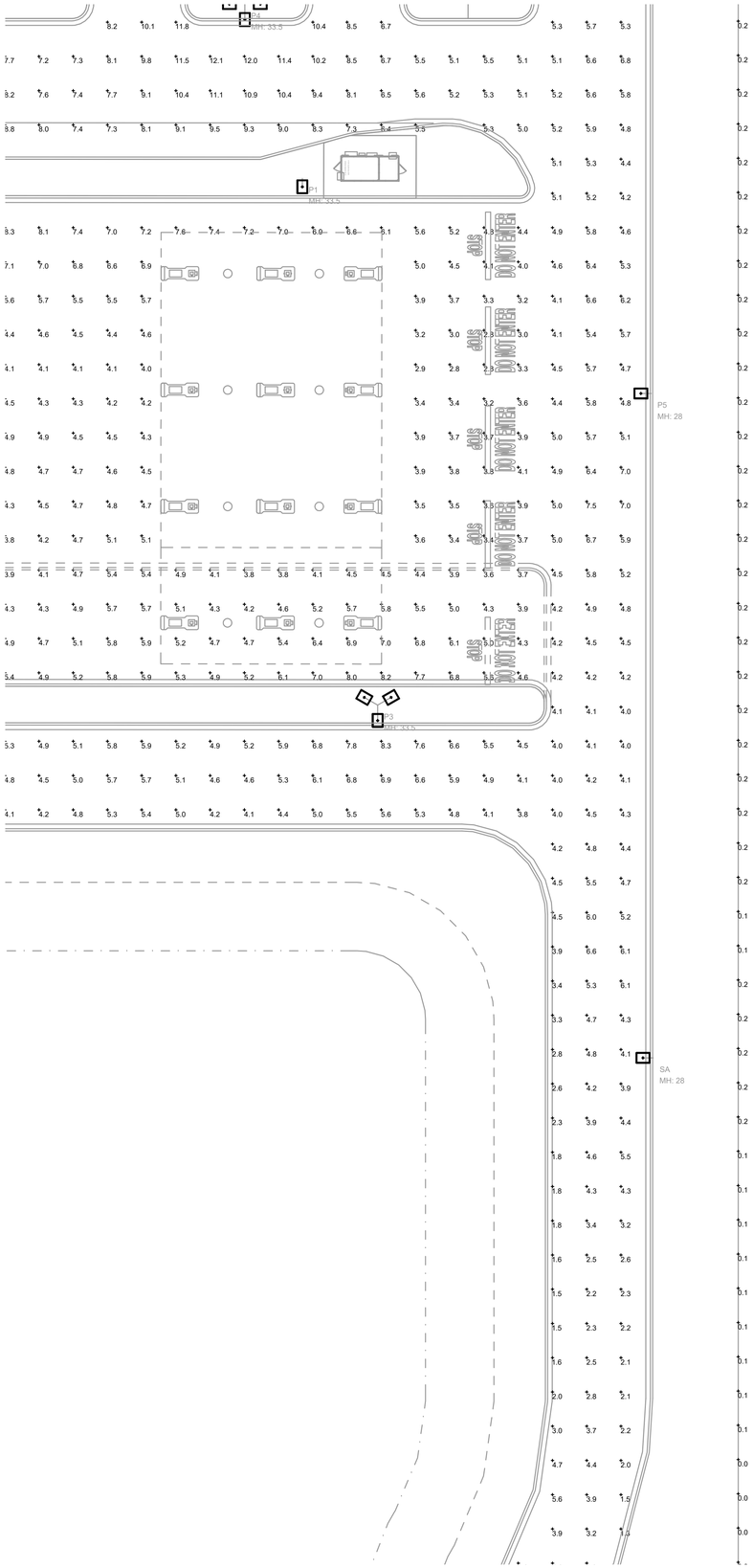

SITE PHOTOMETRIC PLAN

1"=20'-0"

NORTH

SITE PHOTOMETRIC PLAN

ISSUED FOR REVIEW -

NOT FOR PRICING OR CONSTRUCITON

KAMM CONSULTING PROJECT #: 2021-0130
PROJECT MANAGER: JOHN MAYR

KAMM Consulting
1408 Orange Avenue
Fort Pierce, Florida 34950
Phone 954.448.0792
jmayr@kammconsulting.com
Certification of Authorization #8189

PRINCIPAL
Bradly L. Brown Florida License #58232

date

signed

lucido & associate
701 E Ocean Blvd., Stuart, Florida 34994 (772) 220-2100, Fax (772) 22

Key / Location:

Project Team:

Applicant:
M&M Realty Partners
1260 Stelton Rd
Piscataway, NJ 07704
703-839-3776

Engineer:
Maser Consulting
410 Eagleview Blvd, Suite 104
Exton, PA 19341
610-254-9140

Surveyor:
Stephen J Brown Inc
619 E. 5th St
Stuart, FL 34994
772-288-7176

Landscape Architect/Land Planner:
Lucido & Associates
701 E Ocean Blvd
Stuart, FL 34904
772-220-2100

KANNER CPUD
City of Stuart, Martin County, Florida

Master Site Plan

Date	By	Description
8.21.2020	SLS	Initial Submittal
12.18.2020	SLS	1st Resubmittal

NORTH

SCALE: 1" = 100'

0 50' 100' 200'

REG. # 1018
Thomas P. Lucido

Designer	---	Sheet
Manager	---	E1.11
Project Number	---	
Municipal Number	---	
Computer File		

© Copyright Lucido & Associates. These documents and their contents are the property of Lucido & Associates. Any reproductions, revisions, modifications or use of these docume without the express written consent of Lucido & Associates is prohibited by law.

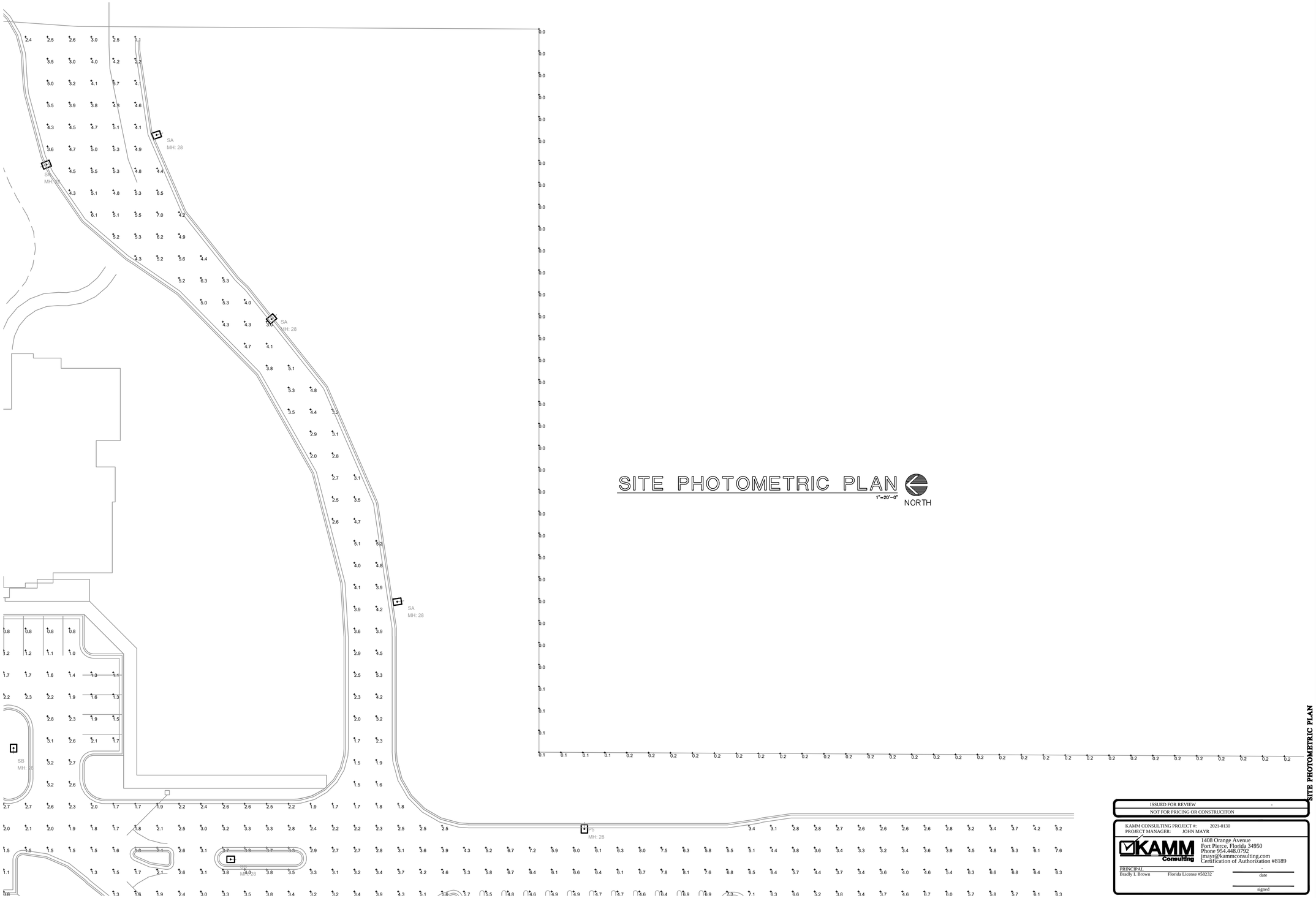

ISSUED FOR REVIEW
NOT FOR PRICING OR CONSTRUCITON

KAMM CONSULTING PROJECT #: 2021-0130
PROJECT MANAGER: JOHN MAYR

KAMM Consulting
1408 Orange Avenue
Fort Pierce, Florida 34950
Phone 954.448.0792
jmayr@kammconsulting.com
Certification of Authorization #8189

PRINCIPAL:
Bradly L Brown Florida License #58232

date

signed

SITE PHOTOMETRIC PLAN

lucido & associate
701 E Ocean Blvd., Stuart, Florida 34994 (772) 220-2100, Fax (772) 22

Key / Location:

Project Team:

Applicant:
M&M Realty Partners
1260 Stelton Rd
Piscataway, NJ 07704
703-839-3776

Engineer:
Maser Consulting
410 Eagleview Blvd, Suite 104
Exton, PA 19341
610-254-9140

Surveyor:
Stephen J Brown Inc
619 E. 5th St
Stuart, FL 34994
772-288-7176

Landscape Architect/Land Planner:
Lucido & Associates
701 E Ocean Blvd
Stuart, FL 34904
772-220-2100

KANNER CPUD

City of Stuart, Martin County, Florida

Master Site Plan

Date	By	Description
8.21.2020	SLS	Initial Submittal
12.18.2020	SLS	1st Resubmittal

NORTH

SCALE: 1" = 100'

0 50' 100' 200'

REG. # 1018
Thomas P. Lucido

Designer	---	Sheet
Manager	---	E1.2
Project Number	---	
Municipal Number	---	
Computer File		

© Copyright Lucido & Associates. These documents and their contents are the property of Lucido & Associates. Any reproductions, revisions, modifications or use of these docume without the express written consent of Lucido & Associates is prohibited by law.

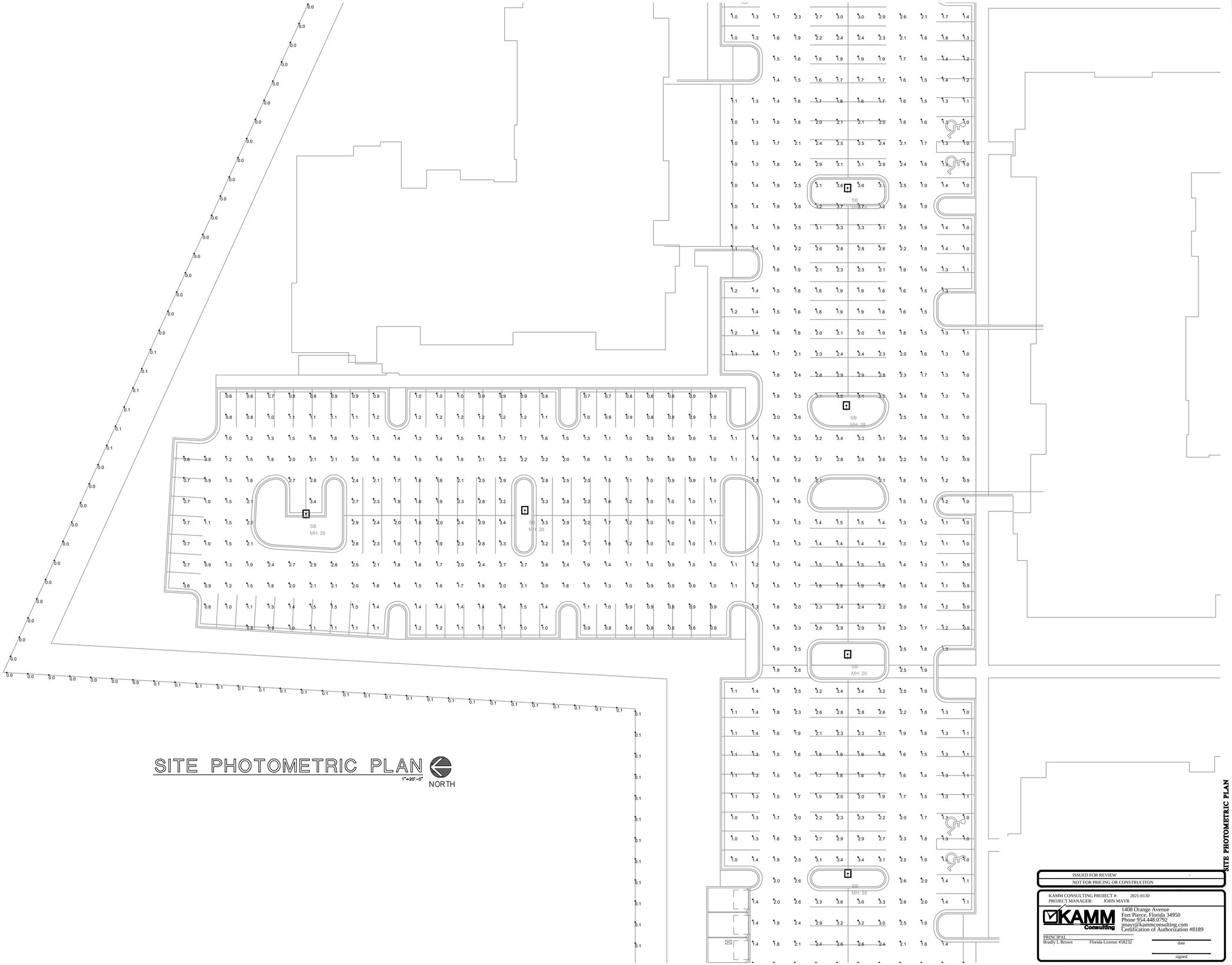

SITE PHOTOMETRIC PLAN

1"=20'-0"

NORTH

SITE PHOTOMETRIC PLAN

ISSUED FOR REVIEW
NOT FOR PRICING OR CONSTRUCITON

KAMM CONSULTING PROJECT #: 2021-0130
PROJECT MANAGER: JOHN MAYR

KAMM Consulting
1408 Orange Avenue
Fort Pierce, Florida 34950
Phone 954-448-0792
jmayr@kammconsulting.com
Certification of Authorization #8189

PRINCIPAL
Bradly L. Brown Florida License #58232

date

signed

lucido & associate
701 E Ocean Blvd., Stuart, Florida 34994 (772) 220-2100, Fax (772) 22

Key / Location:

Project Team:

Applicant:
M&M Realty Partners
1260 Stelton Rd
Piscataway, NJ 07704
703-839-3776

Engineer:
Maser Consulting
410 Eagleview Blvd, Suite 104
Exton, PA 19341
610-254-9140

Surveyor:
Stephen J Brown Inc
619 E. 5th St
Stuart, FL 34994
772-288-7176

Landscape Architect/Land Planner:
Lucido & Associates
701 E Ocean Blvd
Stuart, FL 34904
772-220-2100

KANNER CPUD

City of Stuart, Martin County, Florida

Master Site Plan

Date	By	Description
8.21.2020	SLS	Initial Submittal
12.18.2020	SLS	1st Resubmittal

NORTH

SCALE: 1" = 100'

0 50' 100' 200'

REG. # 1018
Thomas P. Lucido

Designer	---	Sheet
Manager	---	E1.3
Project Number	---	
Municipal Number	---	
Computer File		

© Copyright Lucido & Associates. These documents and their contents are the property of Lucido & Associates. Any reproductions, revisions, modifications or use of these docume without the express written consent of Lucido & Associates is prohibited by law.

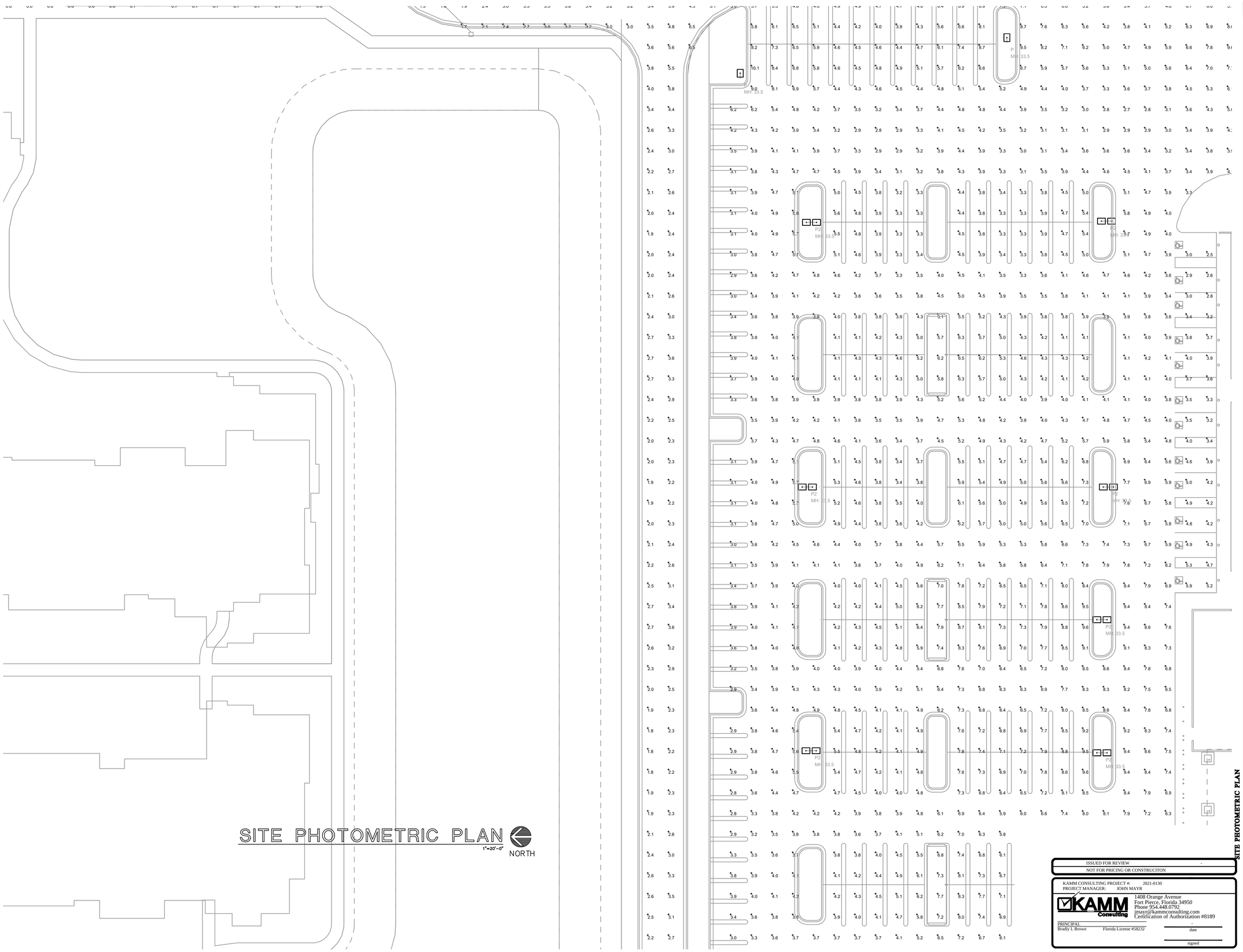

ISSUED FOR REVIEW

NOT FOR PRICING OR CONSTRUCITON

KAMM CONSULTING PROJECT #: 2021-0130
PROJECT MANAGER: JOHN MAYR

KAMM Consulting
1408 Orange Avenue
Fort Pierce, Florida 34950
Phone 954.448.0792
jmayr@kammconsulting.com
Certification of Authorization #8189

PRINCIPAL
Bradly L Brown Florida License #58232

date

signed

lucido & associate
701 E Ocean Blvd., Stuart, Florida 34994 (772) 220-2100, Fax (772) 22

Key / Location:

Project Team:

Applicant:
M&M Realty Partners
1260 Stelton Rd
Piscataway, NJ 07704
703-839-3776

Engineer:
Maser Consulting
410 Eagleview Blvd, Suite 104
Exton, PA 19341
610-254-9140

Surveyor:
Stephen J Brown Inc
619 E. 5th St
Stuart, FL 34994
772-288-7176

Landscape Architect/Land Planner:
Lucido & Associates
701 E Ocean Blvd
Stuart, FL 34904
772-220-2100

KANNER CPUD

City of Stuart, Martin County, Florida

Master Site Plan

Date	By	Description
8.21.2020	SLS	Initial Submittal
12.18.2020	SLS	1st Resubmittal

NORTH

SCALE: 1" = 100'

0 50' 100' 200'

REG. # 1018
Thomas P. Lucido

Designer	---	Sheet
Manager	---	E1.4
Project Number	---	
Municipal Number	---	
Computer File		

© Copyright Lucido & Associates. These documents and their contents are the property of Lucido & Associates. Any reproductions, revisions, modifications or use of these docume without the express written consent of Lucido & Associates is prohibited by law.

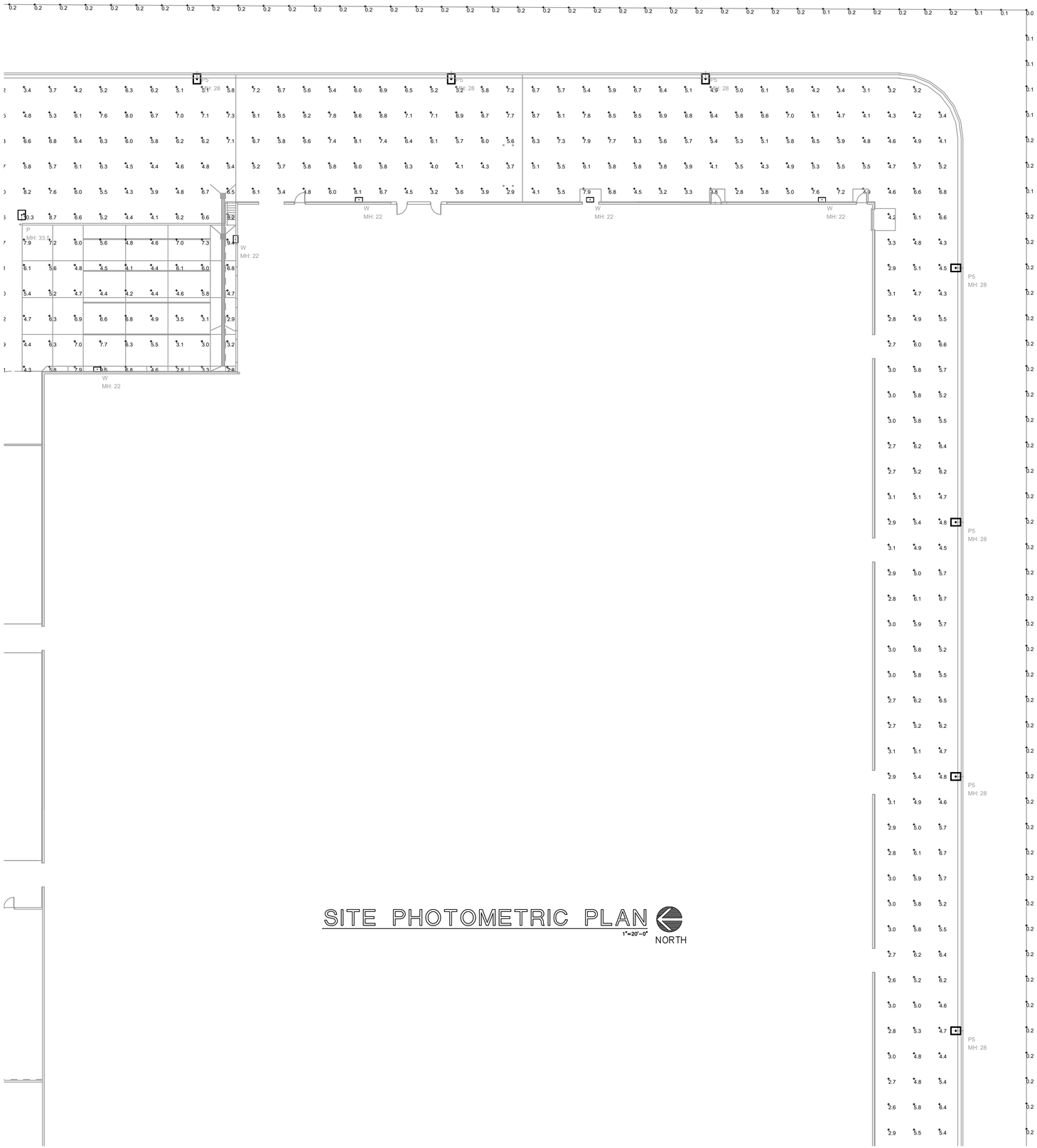

SITE PHOTOMETRIC PLAN

1"=20'-0"

NORTH

SITE PHOTOMETRIC PLAN

ISSUED FOR REVIEW
NOT FOR PRICING OR CONSTRUCITON

KAMM CONSULTING PROJECT #: 2021-0130
PROJECT MANAGER: JOHN MAYR

KAMM Consulting
1408 Orange Avenue
Fort Pierce, Florida 34950
Phone 954-448-0792
jmayr@kammconsulting.com
Certification of Authorization #8189

PRINCIPAL
Bradly L. Brown Florida License #58232

date

signed

lucido & associate
701 E Ocean Blvd., Stuart, Florida 34994 (772) 220-2100, Fax (772) 22

Key / Location:

Project Team:

Applicant:
M&M Realty Partners
1260 Stelton Rd
Piscataway, NJ 07704
703-839-3776

Engineer:
Maser Consulting
410 Eagleview Blvd, Suite 104
Exton, PA 19341
610-254-9140

Surveyor:
Stephen J Brown Inc
619 E. 5th St
Stuart, FL 34994
772-288-7176

Landscape Architect/Land Planner:
Lucido & Associates
701 E Ocean Blvd
Stuart, FL 34904
772-220-2100

KANNER CPUD
City of Stuart, Martin County, Florida

Master Site Plan

Date	By	Description
8.21.2020	SLS	Initial Submittal
12.18.2020	SLS	1st Resubmittal

NORTH

SCALE: 1" = 100'

0 50' 100' 200'

REG. # 1018
Thomas P. Lucido

Designer	---	Sheet
Manager	---	E1.5
Project Number	---	
Municipal Number	---	
Computer File		

© Copyright Lucido & Associates. These documents and their contents are the property of Lucido & Associates. Any reproductions, revisions, modifications or use of these docume without the express written consent of Lucido & Associates is prohibited by law.

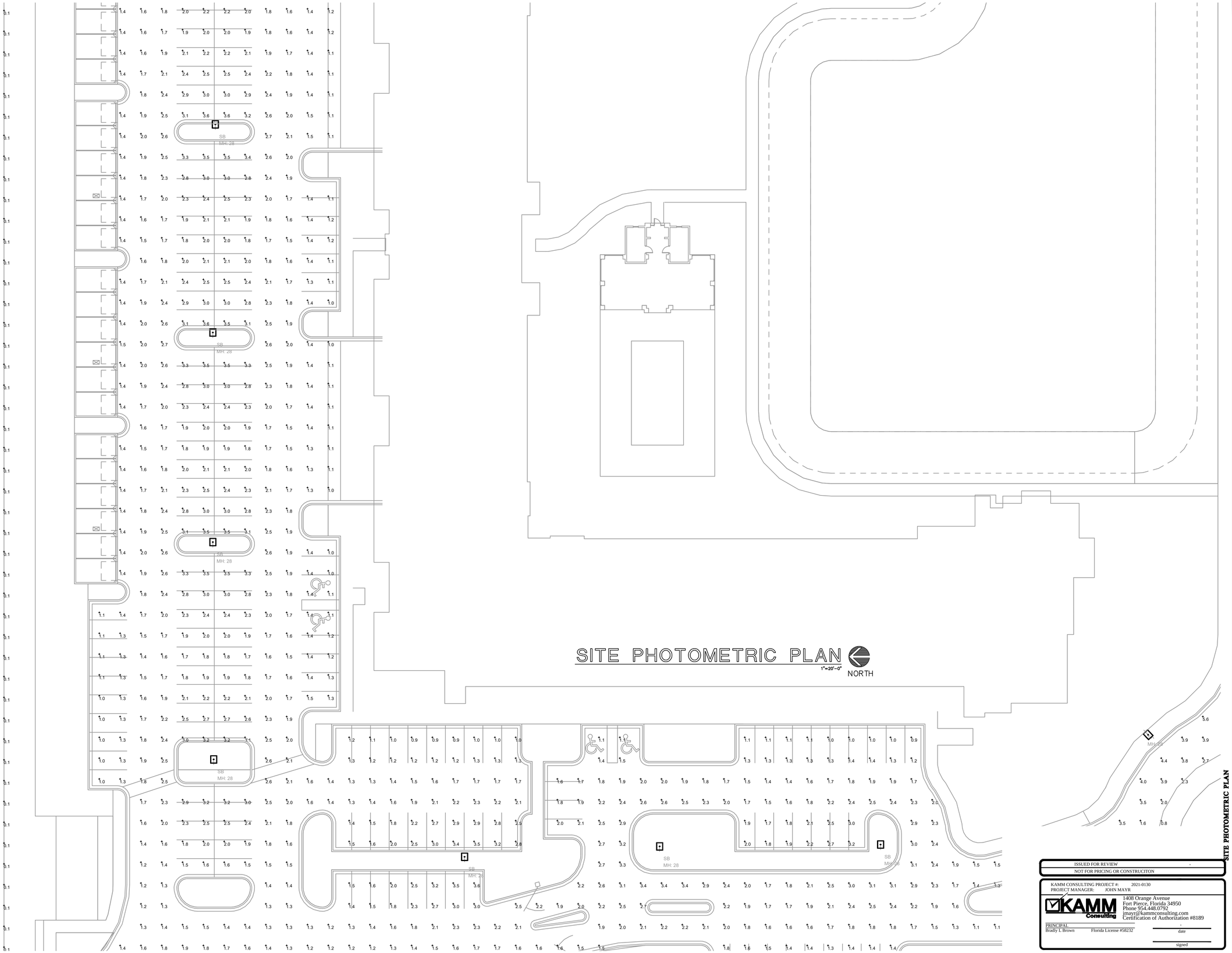

ISSUED FOR REVIEW -
NOT FOR PRICING OR CONSTRUCITON

KAMM CONSULTING PROJECT #: 2021-0130
PROJECT MANAGER: JOHN MAYR

KAMM Consulting
1408 Orange Avenue
Fort Pierce, Florida 34950
Phone 954.448.0792
jmayr@kammconsulting.com
Certification of Authorization #8189

PRINCIPAL: -
Bradly L Brown Florida License #58232 date
signed

SITE PHOTOMETRIC PLAN

lucido & associate

701 E Ocean Blvd., Stuart, Florida 34994 (772) 220-2100, Fax (772) 22

Key / Location:

Project Team:

Applicant:
M&M Realty Partners
1260 Stelton Rd
Piscataway, NJ 07704
703-839-3776

Engineer:
Maser Consulting
410 Eagleview Blvd, Suite 104
Exton, PA 19341
610-254-9140

Surveyor:
Stephen J Brown Inc
619 E. 5th St
Stuart, FL 34994
772-288-7176

Landscape Architect/Land Planner:
Lucido & Associates
701 E Ocean Blvd
Stuart, FL 34904
772-220-2100

KANNER CPUD
City of Stuart, Martin County, Florida

Master Site Plan

Date	By	Description
8.21.2020	SLS	Initial Submittal
12.18.2020	SLS	1st Resubmittal

NORTH

SCALE: 1" = 100'

0 50' 100' 200'

REG. # 1018
Thomas P. Lucido

Designer	---	Sheet
Manager	---	
Project Number	---	**E1.6**
Municipal Number	---	
Computer File		

© Copyright Lucido & Associates. These documents and their contents are the property of Lucido & Associates. Any reproductions, revisions, modifications or use of these docume without the express written consent of Lucido & Associates is prohibited by law.

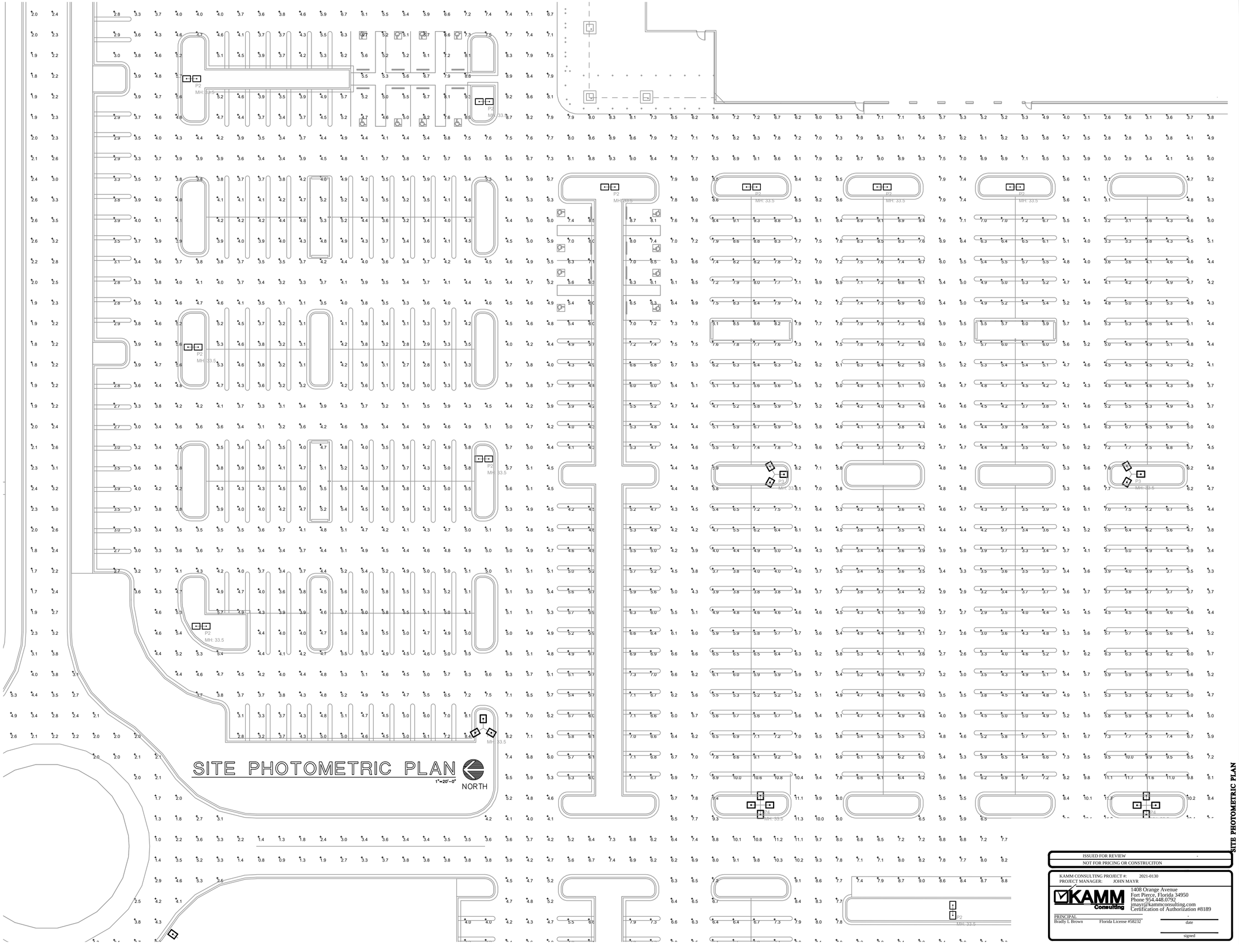

SITE PHOTOMETRIC PLAN

ISSUED FOR REVIEW	-
NOT FOR PRICING OR CONSTRUCITON	

KAMM CONSULTING PROJECT #: 2021-0130
PROJECT MANAGER: JOHN MAYR

KAMM Consulting
1408 Orange Avenue
Fort Pierce, Florida 34950
Phone 954.448.0792
jmayr@kammconsulting.com
Certification of Authorization #8189

PRINCIPAL:
Bradly L Brown Florida License #58232

date

signed

lucido & associate
701 E Ocean Blvd., Stuart, Florida 34994 (772) 220-2100, Fax (772) 22

Key / Location:

Project Team:

Applicant:
M&M Realty Partners
1260 Stelton Rd
Piscataway, NJ 07704
703-839-3776

Engineer:
Maser Consulting
410 Eagleview Blvd, Suite 104
Exton, PA 19341
610-254-9140

Surveyor:
Stephen J Brown Inc
619 E. 5th St
Stuart, FL 34994
772-288-7176

Landscape Architect/Land Planner:
Lucido & Associates
701 E Ocean Blvd
Stuart, FL 34904
772-220-2100

KANNER CPUD

City of Stuart, Martin County, Florida

Master Site Plan

Date	By	Description
8.21.2020	SLS	Initial Submittal
12.18.2020	SLS	1st Resubmittal

NORTH

SCALE: 1" = 100'

0 50' 100' 200'

REG. # 1018
Thomas P. Lucido

Designer	---	Sheet
Manager	---	E1.7
Project Number	---	
Municipal Number	---	
Computer File		

© Copyright Lucido & Associates. These documents and their contents are the property of Lucido & Associates. Any reproductions, revisions, modifications or use of these docume without the express written consent of Lucido & Associates is prohibited by law.

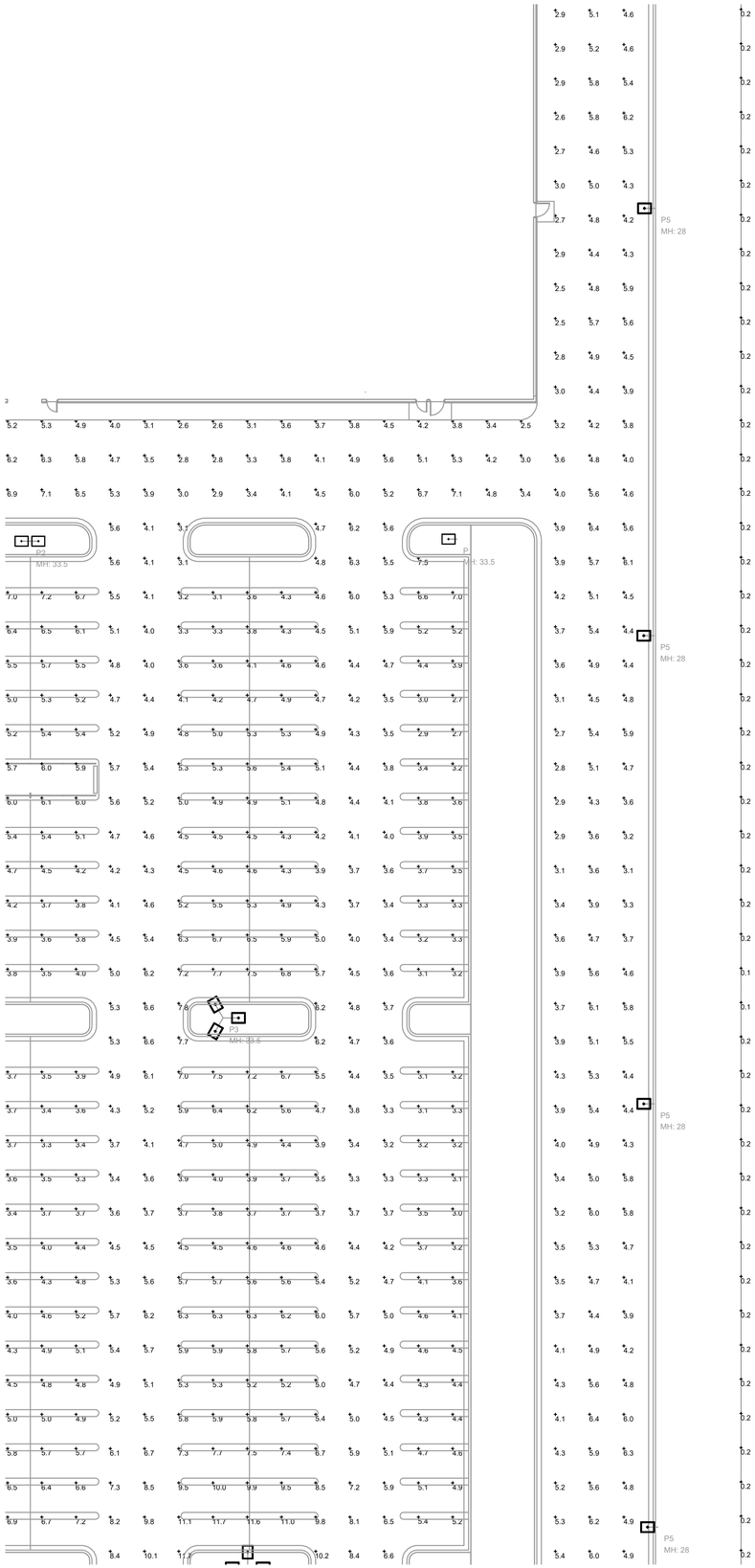

SITE PHOTOMETRIC PLAN

1"=20'-0"

NORTH

ISSUED FOR REVIEW -

NOT FOR PRICING OR CONSTRUCITON

KAMM CONSULTING PROJECT #: 2021-0130
PROJECT MANAGER: JOHN MAYR

KAMM Consulting
1408 Orange Avenue
Fort Pierce, Florida 34950
Phone 954.448.0792
jmayr@kammconsulting.com
Certification of Authorization #8189

PRINCIPAL
Bradly L Brown Florida License #58232

-
date

signed

SITE PHOTOMETRIC PLAN

lucido & associate
701 E Ocean Blvd., Stuart, Florida 34994 (772) 220-2100, Fax (772) 22

Key / Location:

Project Team:

Applicant:
M&M Realty Partners
1260 Stelton Rd
Piscataway, NJ 07704
703-839-3776

Engineer:
Maser Consulting
410 Eagleview Blvd, Suite 104
Exton, PA 19341
610-254-9140

Surveyor:
Stephen J Brown Inc
619 E. 5th St
Stuart, FL 34994
772-288-7176

Landscape Architect/Land Planner:
Lucido & Associates
701 E Ocean Blvd
Stuart, FL 34904
772-220-2100

KANNER CPUD

City of Stuart, Martin County, Florida

Master Site Plan

Date	By	Description
8.21.2020	SLS	Initial Submittal
12.18.2020	SLS	1st Resubmittal

NORTH

SCALE: 1" = 100'

0 50' 100' 200'

REG. # 1018
Thomas P. Lucido

Designer	---	Sheet
Manager	---	
Project Number	---	E1.8
Municipal Number	---	
Computer File		

© Copyright Lucido & Associates. These documents and their contents are the property of Lucido & Associates. Any reproductions, revisions, modifications or use of these docume without the express written consent of Lucido & Associates is prohibited by law.

SITE PHOTOMETRIC PLAN

ISSUED FOR REVIEW
NOT FOR PRICING OR CONSTRUCITON

KAMM CONSULTING PROJECT #: 2021-0130
PROJECT MANAGER: JOHN MAYR

KAMM Consulting
1408 Orange Avenue
Fort Pierce, Florida 34950
Phone 954.448.0792
jmayr@kammconsulting.com
Certification of Authorization #8189

PRINCIPAL
Bradly L Brown Florida License #58232

date

signed

lucido & associate
701 E Ocean Blvd., Stuart, Florida 34994 (772) 220-2100, Fax (772) 22

Key / Location:

Project Team:

Applicant:
M&M Realty Partners
1260 Stelton Rd
Piscataway, NJ 07704
703-839-3776

Engineer:
Maser Consulting
410 Eagleview Blvd, Suite 104
Exton, PA 19341
610-254-9140

Surveyor:
Stephen J Brown Inc
619 E. 5th St
Stuart, FL 34994
772-288-7176

Landscape Architect/Land Planner:
Lucido & Associates
701 E Ocean Blvd
Stuart, FL 34904
772-220-2100

KANNER CPUD

City of Stuart, Martin County, Florida

Master Site Plan

Date	By	Description
8.21.2020	SLS	Initial Submittal
12.18.2020	SLS	1st Resubmittal

NORTH

SCALE: 1" = 100'

0 50' 100' 200'

REG. # 1018
Thomas P. Lucido

Designer	---	Sheet
Manager	---	
Project Number	---	E1.9
Municipal Number	---	
Computer File		

© Copyright Lucido & Associates. These documents and their contents are the property of Lucido & Associates. Any reproductions, revisions, modifications or use of these docume without the express written consent of Lucido & Associates is prohibited by law.